2026 VETERANS RACE OF REMEMBRANCE

Regulations – Sporting & Technical

V2
10/13/2026

1. INTRODUCTION 4

2. ORGANIZATION 5

2.1. Event Organizer and Sporting Committee 5
2.2. Name of the Parent ASN 5
2.3. ASN Visa/Registration Number 5
2.4. List of Officials 5

3. REGULATIONS AND LEGAL BASIS OF THE EVENT 5

3.1. Governing Regulations 5
3.2. Official Language 5
3.3. Responsibility, changes to the rules of participation and cancellation of the event 5
3.4. Event Code of Conduct 6
3.5. Alcoholic Beverages 7
3.6. Narcotics and Drugs 7
3.7. Effectiveness of the Regulations and Ranking 7
3.8. Instructions of VRoR Officials 7

4. ENTRIES 7

4.1. Registrations/entries 7
4.2. Competition Class Structure 7

5. LICENSES 9

5.1. Required Grade of License 9
5.2. Age Regulations 10
5.3. Physical Disabilities 10

6. INSURANCE, LIABILITY EXCLUSION AND DISCLAIMER 10

6.1. Organizer's/Promoter's Insurance 10
6.2. Declaration by the Competitor (Entrant) and Driver on the exclusion of liability, disclaimer of the Car Owner 10

7. EVENT FORMAT 10

7.1. Race 10
7.2. Driver's Briefing 11

8. SCRUTINEERING/TECHNICAL CHECKS 11

8.1. Initial Scrutineering 12
8.2. Subsequent Scrutineering 12

8.3. Replacement of Cars, Engines, and Gearboxes 13

9. RUNNING OF THE EVENT 13

9.1. Driver Briefings 13
9.2. Practice Sessions 13
9.3. Pre-Grid 13
9.4. Qualification 13
9.5. Starting Grid 14
9.6. Races 15

10. TITLE AND TROPHIES 23

10.1. Podium and Awards Ceremonies 23

11. PROTESTS AND APPEALS 23

11.1. Right to Protest and Time Limits 23
11.2. Appeals 25

12. ADVERTISING, MEDIA, AND TELEVISION RIGHTS 29

13. SPECIFIC REGULATIONS 30

13.1. Paddock 30
13.2. Pit Lane Allocation 30
13.3. Track 31
13.4. Incidents 32
13.5. Stewards' Inquiries 32
13.6. Penalties 32

14. SAFETY 34

14.1. Extrication Exercise 34
14.2. Pit Lane Safety 34
14.3. General Safety 35

15. FLAG SIGNALS 38

16. PENALTY TABLE 39

17. REFUELING INTRODUCTION 41

17.1. General 41
17.2. Fueling Containers 41

17.3. Fuel Rigs 41
17.4. Diagram of Fuel rig components for FIA 252-7 42
17.5. Self-Closing "Deadman" Valve 42
17.6. Tank Level Measurement 42
17.7. Electrical Grounding 43
17.8. Re-fueling Booms, Overhead devices 43
17.9. Re-fueling Hose Length 43
17.10. Fuel Fill & Vent Hardware 44
17.11. Fuel Fill & Vent Hoses 45

18. CREW REQUIREMENTS 45

18.1. Fueling Via dual Red Head 45
18.2. Helmets 45
18.3. Fire Resistant Clothing 46

19. VEHICLE REQUIREMENTS 47

19.1. General 47
19.2. Roll Cages 47
19.3. Window Nets 48
19.4. Safety Harness 48
19.5. Decals and Advertising 49
19.6. Racing Numbers 49
19.7. Tire Usage 49
19.8. Fuel systems 49
19.9. Transponders 49
19.10. RaceLink GPS/In-Car Flagging Unit 50
19.11. Radio Communication 50
19.12. On-board Video & Streaming 51
19.13. Fire suppression 51
19.14. Ballast 51

20. DRIVER SAFETY GEAR 52

1. Introduction

The Veterans Race of Remembrance, herein after called the Event, is organized in conformity with the provisions of the International Sporting Code and its appendices (the Code) and the National Sporting Regulations of the United States Auto Club, herein known as USAC. It will be run in conformity with all Parts of the Sporting and Technical Regulations, the latter being in conformity with the safety prescriptions of FIA Appendix J (Article 277).

The Event will be run according to the above regulations. For the avoidance of doubt, should there be any inconsistency or conflict between the individual sets of regulations, then the order of priority shall be firstly ***these*** Event Regulations, followed by the USAC Regulations, ***and finally*** the International Sporting Code. Matters relating to the Event will be included within the Supplementary Regulations. Additional event specific updates and adjustments to the regulations may also be provided in Event Notes and at mandatory event briefings.

See Appendices for additional, Event specific regulations and format.

The Event is supported by the following companies*:

- ***CrowdStrike***
- ***AWS***
- ***Michelin***
- ***Mobil 1***
- ***Cloudera***
- ***Carahsoft***
- ***Terra Security***
- ***Remedio***
- ***C-Connex***
- ***Jetstream***
- ***BDO***
- ***Pratt & Miller***
- ***AAMCO***

* Subject to change

2. Organization

2.1. Event Organizer and Sporting Committee

USAC is sanctioning the Event in 2026. The permanent office address of USAC is:

Organization: USAC
4910 W. 16th Street
Speedway IN 46224 USA
Homepage: OperationMotorsport.org/veterans-race-of-remembrance/

Contacts:

Contacts: Randy Hembrey, Director of Road Racing	
Mobile:	+1 847.809.3969
E-Mail:	Randy@usacnation.com
Richard Muise, Technical & Sporting Director	
Mobile:	+1 613.277.7269
E-Mail:	richard@Focused-Motorsports.com
Jonathan Vance, Planning Director	
Mobile:	+1 315.455-0109
E-Mail:	jonathan.vance@operationmotorsport.org
Dale Johnson, Event Technical Manager	
Mobile:	+1 252.367-1180
E-Mail:	dale@usacnation.com

A Sporting Committee will be established comprising of the following people or their representatives:

- USAC Director – Road Racing
- USAC Director - Competition, Road Racing
- ***Veteran's Race of Remembrance Technical & Sporting Director***
- ***Event Technical Manager***

The role of the Sporting Committee will include taking decisions on:

- Any questions concerning points or the classification of the Series.

Decisions taken by the Sporting Committee shall be final and are not subject to protest or appeal.

2.2. Name of the Parent ASN

Organization:
USAC
4910 W. 16th Street
Speedway IN 46224 USA

2.3. ASN Visa/Registration Number

The Event is based on these Sporting and Technical Regulations and has been approved by USAC. The VISA number will be available in the event Supplemental Regulations.

2.4. List of Officials

See also Supplementary Regulations for the Event.

3. Regulations and Legal Basis of the Event

3.1. Governing Regulations

The Event is governed by the following regulations:

- These Sporting and Technical Regulations
- ***VRoR*** Supplementary Regulations
- ***VRoR*** Event Notes
- USAC Circuit Rules, except where any special regulations are set out in the rules presented here
- USAC License Regulation
- USAC Legal System
- The "Application for Entry" signed by the Competitor/Driver
- USAC Code of Conduct
- Other FIA and USAC regulations

3.2. Official Language

For these Regulations only the English text approved by USAC is binding, in case of interpretation the USAC jurisdiction is the responsible authority. The official language of the International Sporting Code is stated within that document.

3.3. Responsibility, changes to the rules of participation and cancellation of the event

(a) The participants (Competitors, Drivers, car owners, team members and team guests) attend and take part in the Event at their own risk. They are solely responsible under civil and criminal law for any and all damage caused by them – or for damage to the cars used by them, as far as no exclusion of liability has been concluded.

(b) ***Corollary to (a) above, all track, facility or track vehicle damage from an incident, which may include barrier damage, excessive fluid cleanup, will be billed to the Entrant. Determination of fault will be at sole discretion of VRoR officials***.

(c) The Supplementary Regulations for the Event may only be changed by ***VRoR officials***. Once the event starts, changes in the form of bulletins may only be made by the Race Director or Stewards.

(d) The Event Organizer reserves the right to cancel ***the*** event or individual races. Claims for damages or performance shall be excluded in all such cases.

3.4. Event Code of Conduct

The Veterans Race of Remembrance is characterized by equality of opportunity and fairness in both technical and sporting terms. All those involved in the Event (i.e. participants, officials and organization) make a significant contribution to how the Event is perceived, both internally and by the general public and to the atmosphere during the Event through their conduct and their communication.

All those involved are responsible for conducting themselves in such a way as to uphold and safeguard in the long term the professionalism that prevails for the Event, as well as the esteem in which the Event and its participants are held within motorsport and by the general public. Moreover, fair and sporting event represents an important safety aspect for all participants and is intended to minimize the risks involved.

For this reason, all those involved agree to acknowledge the philosophy of the Veterans Race of Remembrance and to comply with the rules of conduct of the Event.

(a) Both on and off the racetrack, all those involved will:

- Treat all participants, officials, and organizers respectfully,
- Follow the laws and the rules of the sport; exemplify and promote fairness together with the rules of conduct,
- Neither express themselves or behave in an insulting, offensive or abusive way, nor tolerate such expressions or modes of conduct, either in direct conversations, interviews, etc. or in other communication, e. g. press releases, posts in social media, etc.
- Always behave in the interests of safety and permanently cooperate in efforts to reduce risks,
- Use resources in a sustainable way, giving priority to the well-being, safety, and satisfaction of others before their own personal goal,
- Always comply with the purpose of the sport,
- Inform those who are involved if their conduct is not characterized by fairness, sportsmanship, respect, and tolerance,
- Cooperate with all other persons involved to develop and improve the Event and its status further on a continuous basis.
- Respect the local laws and local customs.
- Follow the provisions of the USAC Social Media Policy (Article 12)

(b) Participants who are found to have committed one or more of the following may be excluded by ***VRoR officials*** from the Event or for future events or may be disqualified by the Stewards of the Meeting:

- Failed to comply with the rules of good conduct.
- Breached any of the Regulations.
- Drawn attention to themselves through unsporting behavior on or off the track.
- Expressed themselves or behaved in a disrespectful way towards other participants, officials, organizers, etc.
- Ignored the specifications, instructions, meetings of the Event Organization and/or other official bodies in the context of the organization and holding of an event.
- Ignored agreements that had been reached (including between Competitors, teams and Drivers) and did not meet obligations of performance.
- Did not act in the interests of the sport and/or the recognizable objective of undertaking the activities seriously in accordance with the rules that have been acknowledged.
- Brought the Event, organizers or officials or the sport in general into disrepute.

3.5. Alcoholic Beverages

Participants at the event shall not consume alcoholic beverages during the performance of their duties at the racetrack.

3.6. Narcotics and Drugs

The use of any narcotic or illegal substance, as defined in law, or the improper use of legal substances, by any participant is prohibited. The Race Officials may prohibit participation if it is suspected that any substance has been consumed.

3.7. Effectiveness of the Regulations and Ranking

In the event of a conflict between the entry documents and these Regulations, then the current version of these Regulations shall take precedence. Event specific regulations (Supplementary Regulations) may further modify/adjust these regulations and shall take precedence. Further modifications or adjustments to the Regulations by Bulletin or at mandatory briefings during the Event shall take precedence over all other Regulations.

3.8. Instructions of VRoR Officials

Instructions of VRoR event officials shall always be followed. In the event of failure of any Competitor, team, team member, Driver, guest or other individual to comply with these Regulations, ***VRoR officials*** will notify the Stewards who may impose a penalty up to disqualification from the event.

4. Entries

4.1. Registrations/entries

4.1.1. ***VRoR*** reserves the right to refuse an Entry at its own discretion, stating the reason. There is no automatic entitlement to acceptance or participation in the Event.

4.1.2. Acceptance of any Entry remains provisional until the physical license(s) and any supporting authorizations have been presented by the Competitor and/or Driver, and their validity accepted/eligibility confirmed, at the scheduled license verification at the Event.

4.1.3. Each Entry must have a minimum of 2 drivers and a maximum of 6 drivers.

4.2. Competition Class Structure

The classification of vehicles is based on power to weight, measured as BHP / ton (US), ***or by their homologation if available***. The following four classes are defined for the Veterans Race of Remembrance. ***Homologated Cars may be entered as listed below, provided they have retained all manufacturer or series engine seals. Any such Cars must run as homologated and may be subject to Balance of Performance specifications detailed in an Event Technical Bulletin.***

Balance of performance (BOP) adjustments for any vehicle in any class may be set by the Technical Director such as, but not limited to, minimum weight, ride height or fuel capacity.

If there are sufficient entries, a single-marque Invitational class may be created upon request to the organizer.

Sacrifice class
The Sacrifice Class are prototypes and sports racers. There are two sub-classes in Sacrifice.

Sacrifice P1
The following are examples of prototypes expected to fit into this subclass:
- *Sebeco NP01 SPX – homologated with 2.5L uprated engines*
- *Radical 1500 - homologated*
- *Revolution 427*

Sacrifice P2
The following are examples of prototypes expected to fit into this subclass:
- ***Sebeco NP01 – homologated with 2.0L standard or 2.5L restricted engines***
- ***Radical 1340 - homologated***
- ***ZRS ZP2***
- ***WRL GTU***

The Technical Director will evaluate the eligibility of other prototypes upon request.

Freedom class
The Freedom Class are sports cars between 226 to 280 bhp / ton. ***The following are examples of cars expected to fit into this class:***
- ***SRO GT4 - homologated***
- ***WSC TCR - homologated***
- ***SCCA T1***
- ***SCCA American Sedan***

Valor class
The Valor Class are sports cars between 176 to 225 bhp / ton. ***The following are examples of cars expected to fit into this class:***
- ***SRO TCX - homologated***
- ***SRO TC – homologated***
- ***Race of Remembrance Class D***
- ***ZRS ZR2 or ZR3***
- ***WRL GP1***
- ***NASA ST3 & E0 (TBC)***
- ***SCCA T2***

Remembrance class
The Remembrance Class are sports cars between 126 to 175 bhp / ton. ***The following are examples of cars expected to fit into this class:***
- ***SRO TCA - homologated***
- ***Toyota GR Cup - homologated***
- ***Miata MX-5 Cup - homologated***
- ***Race of Remembrance Class C***
- ***ZRS ZR3***
- ***WRL GP3/GP2***

- ***NASA ST5 & E2***
- ***SCCA T3***

Honor class

The Honor Class are sports cars between 75 to 125 bhp / ton. ***The following are examples of cars expected to fit into this class:***

- ***Race of Remembrance Class B***
- ***WRL GP3***
- ***SCCA Spec Miata, CASC-OR Miata Cup***
- ***SCCA B-Spec***

For the official classification of cars, the process above will be used. The following table may assist those more familiar with other systems.

Class	*VRoR official classes*	*Approximate lbs / hp*
Freedom	*226 to 280 hp/ton*	*Approx. up to 7.1 lbs/hp*
Valor	*176 to 225 hp/ton*	*Approx. up to 8.9 lbs/hp*
Remembrance	*126 to 175 hp/ton*	*Approx. up to 11.4 lbs/hp*
Honor	*75 to 125 hp/ton*	*Approx. up to 16.0 lbs/hp*

For the purposes of Qualifying and the Starting Grid, ***Sacrifice will be one group***, Freedom and Valor classes will be ***the second*** group, and the Remembrance and Honor classes will be the ***third*** group.

For the purposes of ***the Race***, pit openings under SC/FCY, the ***Sacrifice***, Freedom and Valor classes will be one group (Group 1), and the Remembrance and Honor classes will be the other group (Group 2).

The organizers reserve the right to rebalance the groupings based on number of entries per class.

4.2.1. The organizers reserve the right to reclassify a car into another higher or lower class depending on qualification, practice and race lap times. The organizers decision on class is final.

4.2.2. Teams must declare their vehicle power at the wheels and vehicle weight at the time of entry. Teams must submit the results of a rolling road dyno of the vehicle in its race specification. The date of the dyno results must be from 2025. The teams are responsible for the cost of the dyno test. ***Homologated vehicles are not required to submit a dyno result.***

4.2.3. The vehicle weight is measured without driver. It may be verified by the Technical Scrutineers at any time during the event.

4.2.4. In order to meet the power to weight ratio, ballast may be used. See Article 19.14.

5. Licenses

5.1. Required Grade of License

5.1.1. Competitors (Drivers)

Drivers must be in possession of a valid USAC License to participate in the event.

Drivers holding a valid license from one of the following are eligible to apply for a USAC license for the event:

- FIA International race license
- USAC Pro Driver's license
- SCCA and SCCA Pro race license
- INDYCAR race license
- IMSA race license
- NASA Full Competition license
- ASN Canada or any affiliated regional race license
- A national license issued by their home ASN
- SRO race license
- PCA race license
- BMW CCA race license
- HSR, SVRA or other Vintage race license with approval
- Any WRL-accepted license accepted by USAC upon request

USAC has the final determination of acceptance of a driver's license or other qualifications.

USAC reserves the right of refusal to accept a license without stating the reason for such refusal.

5.2. Age Regulations

The minimum age for competitors or access to pit lane is 16 (sixteen) years of age at the time of the event.

5.3. Physical Disabilities

Drivers with physical disabilities are welcome. Non-ambulant drivers can be identified in Race Control through their Driver Id while they are in the car.

6. Insurance, liability exclusion and disclaimer

6.1. Organizer's/Promoter's Insurance

The insurance company and policy number will be available from ***VRoR*** for the Event.

6.2. Declaration by the Competitor (Entrant) and Driver on the exclusion of liability, disclaimer of the Car Owner

In accordance with ***VRoR*** Event Regulations.

7. Event Format

The event consists of Driver Briefings (Article 7.2), pre-event safety inspections (Article 8), one Practice session, a Qualifying session split into ***three*** Groups (Article 9.4), and the ***8*** Hour race, divided into 2 segments. The race Segment 1 will be suspended for the Remembrance Ceremony ***in the*** morning. Segment 2 will resume after the Ceremony and conclude ***in the*** afternoon.

The race will be scored as a single ***8***-hour race, and the final results based on the end of Segment 2.

7.1. Race

The starting driver for Race Segment 1 must be the driver that set the fastest qualifying time for the car.

Race Segment 1 will be run ***in the*** morning. At the end of Race Segment 1, the race will be suspended. The suspension procedure will be covered in the Drivers Briefing. All cars will proceed around to the Front Straight where they will be organized by the Pit Officials.

The Remembrance Ceremony will be held in Pit Lane once all cars have stopped, engines off. All drivers, crew, officials, veterans, family and friends are welcome to join the Ceremony. For the purposes of the Ceremony, they may cross pit lane only after all race vehicles have stopped and permission given by a Race Official.

Race Segment ***2*** will resume after the Ceremony. The field will be led away by the Safety Car and the restart will be single file.

The race will finish with a black & white checkered flag displayed to the race leader the first time they pass the Finish Line after the scheduled time. All cars will slow and continue around to pit lane and then to the impound area in the paddock. Failure to report to impound after the race may result in a penalty.

7.2. Driver's Briefing

The time and location of the Driver's meeting/briefing will be published in the Schedule or Supplementary Regulations of the Event. All Drivers, together with their Entrant's authorized representative, must be present throughout the briefing.

A Driver may not take part in the Event until they or a designated representative has attended the respective Drivers' briefing or, where agreed by exception, received a personal briefing from the Race Director.

Any non-attendance or late attendance may result in a fine or other penalty being imposed by the Event Officials.

8. Scrutineering/Technical Checks

Before and, as required, during or after the Event all cars will be inspected by one or more Technical Scrutineers licensed by USAC or an FIA affiliated ASN. Any car can be selected at any time by the Race Director, Technical Manager, or Stewards for a further technical examination, including examination outside the event venue.

The Technical Scrutineers are entitled to check any aspects of the cars in competition at any time during the Event and may conduct checks without prior request from the Clerk of the Course, Race Director, or the Stewards.

The Technical Scrutineers are responsible for the operation of the Parc Fermé and are the only persons authorized to give instructions in this respect to the Competitors.

Competitors and Drivers shall always follow the instructions of the Technical Scrutineers regarding the checking and re-inspection of cars.

8.1. Initial Scrutineering

Before the commencement of the Event, the Competitor must present their Car, and the Driver must present the compulsory Driver's safety equipment at Technical Scrutineering.

The Car must be presented in the configuration as it will be used in the event (including competition numbers, branding, and decals as required). It is the Competitor's responsibility to ensure that the car is always in full compliance with the applicable Technical Regulations throughout the event, commencing with pre-event scrutineering. The presentation of a car for scrutineering will be deemed an implicit statement of conformity.

The cars (Article 19) and Drivers' safety (Article 20) equipment are to be shown to the Technical Scrutineers for technical and visual examination during the stated inspection periods. The inspection periods are to be strictly adhered to.

Once pre-event technical scrutineering is completed, the Cars may only leave the paddock with the permission of ***VRoR officials***. Any Car that is permitted to leave the paddock must be presented again to the Technical Scrutineers before taking any further part in the event. It is the Competitor's responsibility to present the Car to the Technical Scrutineers. No Car may take part in an event until it has been authorized by the Scrutineers.

8.2. Subsequent Scrutineering

After qualifying and the race, all Cars must be brought to the Parc Fermé area by the route described in the Drivers' Briefing unless otherwise specified by the Race Director, Technical Manager, or Stewards. The Parc Fermé area will be identified in the Supplementary Regulations or in the notes from the Drivers' Briefing. The route from the finish line to the Parc Fermé is subject to the Parc Fermé provisions. All Cars must be driven by the Entered Drivers in full racing equipment to the Parc Fermé after qualifying and racing; this does not apply to the Technical Scrutineers and their assistants or nominated Drivers for podium Cars in accordance with the Article 10.1.

All Cars are subject to Parc Fermé conditions until released by the Technical Scrutineers or the Stewards. During this time, no works of any kind may be performed on the Cars. Once in the designated area, no Car may be removed without the permission of the Technical Scrutineer or Race Director. No individual may enter Parc Fermé without the permission of the Technical Scrutineers or Race Director. Cars failing to adhere to the Parc Fermé Regulations may be found technically non-compliant.

Cars that have been involved in an accident at any time during an event must be presented to the Technical Scrutineers. Any necessary repairs identified by the Technical Scrutineers must be completed satisfactorily by the Competitor prior to further participation in the current or future Events.

8.3. Replacement of Cars, Engines, and Gearboxes

A Team (Entrant) may not replace a Car that has already been entered, unless the Car has suffered significant or irreparable damage before the start of the Race. The Competitor must make written application to ***the Technical Director*** seeking permission to enter a replacement Car and it shall be at the sole discretion of ***the Technical Director*** whether to accept or reject the application. Should ***the Technical Director*** choose to accept such an application, that acceptance may be given subject to specific conditions. Drivers requiring a replacement or backup Car after being found wholly or predominantly responsible for a multi-car incident necessitating the change may be further restricted from receiving such permission. Where the replacement of a Car is accepted after Qualifying it will normally be on condition that the Car starts the race from the back of the Class (Group).

Competitors must make written application to ***the Technical Director*** seeking permission to undertake a change of engine or gearbox after Initial Scrutineering has been completed. Where the replacement of an engine or gearbox is accepted after Qualifying it will normally be on condition that the car starts the subsequent race from the back of the Class (Group).

9. Running of the Event

9.1. Driver Briefings

All drivers and Crew Chiefs must attend the scheduled Briefings. See Article 7.2.

9.2. Practice Sessions

Practice sessions will be timed.

9.3. Pre-Grid

The Pre-Grid is the line-up of all cars before entering the circuit for all Test Sessions, Practices, Qualifying and Races. All cars must be driven from the team awning/pit to the official Pre-Grid by the relevant Driver or Crew member as described in the Drivers Briefing. In the case of a scheduled closing time for the Pre-Grid, all cars must be present on the Pre-Grid before the published Pre-Grid Closed time. Cars failing to meet the published closing time may be moved to the back of the grid and forfeit their starting position for the relevant session. The final decision on participation in the session is taken by the Stewards or Race Director.

All tires must be fitted at the 5-minute signal. All drivers must be in their cars at the 3-minute signal.

9.4. Qualification

Three qualifying sessions are scheduled. ***The first session will be the*** Remembrance and Honor. The ***second session*** will be Freedom and Valor. ***The third session*** will be ***Sacrifice classes***. ***The qualifying for each group will conclude with a checkered flag at Start/Finish. Upon receiving the checkered flag, all*** cars must return to pit lane.

Fastest laps set in the Qualifying Session by each car will determine the grid for the Race. Only one entered Driver per car is s permitted to drive in the Qualifying Session. The Qualifying Driver must start the Race (Article 9.6.2).

If two (2) or more drivers set identical times during Qualifying, priority will be given to the one who set it first.

All Cars must start ***their*** Qualifying Session from their assigned pit boxes. Cars may release from their respective pit boxes upon the announcement of the green flag to start their respective qualifying ***session***.

9.4.1. Permitted work

Once a car has left the pit box to start ***their*** qualifying session, permitted work includes:

- Checking/adjusting tire pressure
- Removing/clearing debris from radiator screens
- Tend to the Driver
- Raise the Car for visual checks
- Remove/Replace one (1) damaged tire (Requires approval from a Race Official. Flat spots or similar Driver-induced issues are not considered damage for the purposes of the approved replacement.)

Should any other non-approved work be performed, the Car will lose all previously set times up to that point. After the conclusion of ***their*** session (Checkered Flag), only checking of tire pressures is permitted.

9.4.2. Stoppages during Qualifying

Should ***their*** qualifying session be stopped for any reason, all cars in that Group must proceed slowly back to the pit lane. Once in pit lane, cars must proceed to their assigned pit box. No Cars may queue at the pit exit. Cars must remain in their pit box until released over the Race Control frequency or by a Pit Official.

Any Driver causing a qualifying session to be stopped may have their two (2) fastest laps in that Qualifying session deleted.

9.4.3. Starting Order

- The Starting order of the Race will be set by the fastest lap in the Qualifying session.
- The starting order shall be comprised of (3) Groups – ***the Sacrifice class, followed by*** Group 1 (Freedom & Valor) and ***then*** Group 2 (Remembrance & Honor). ***The Sacrifice with Group 1 will receive their Start, followed by a separate Start for Group 2. The grouping may be adjusted by the organizers based on the number of entries***. Expectations for the appropriate gap between ***the Groups*** will be detailed at the Driver's Briefing.

To be ordered in the Qualifying results, a car must complete a registered qualifying time (lap). At the end of the qualifying session, all cars which participated in the session are subject to the Parc Fermé rules.

Should circumstances force the cancellation of an entire qualification session or a qualification session be stopped before all cars in that session have had the opportunity to set a time (as determined by the Race Director, at their sole discretion) and cannot be resumed, the Race grids will be set by the order of registration, and gridded by Group 1 and Group 2.

9.5. Starting Grid

The starting grid for the race will be determined by the fastest times achieved in qualifying as defined in Article 9.4. Should any grid place penalties be applicable, these will be applied in the order in which the relevant offences occurred.

Drivers who have had all lap times disallowed or invalidated must, in all cases, start the race at the back of the Group. Should more than one Qualifying Driver have all times removed, their starting positions at the back of the Group will be determined by the order of their registration.

If one or more Drivers have not set a lap time (for reasons other than cancellation or shortening of the qualifying session) but are given permission by the Stewards to take part in the race, these Drivers will be placed at the end of their Group on the starting grid in the order of their registration.

9.6. Races

9.6.1. Pre-Race

The approach of the formation lap will be announced to Competitors at the following times:

- Five (5) minutes
- three (3) minutes
- one (1) minute
- ten (10) seconds

At zero seconds the Cars will begin a formation lap behind the Safety (Leading) Car, maintaining the speed of the Safety (Leading) Car and their starting order.

9.6.2. Starting Drivers

All Starting Drivers must be the Qualifying Driver, except in the case of force majeure, as determined by the ***Sporting Director***. In the case of a change of Starting Driver, the relevant Car may be required to start the Race at the back of Class (group).

9.6.3. Formation Lap(s)

The number of formation laps prior to the start of the Race will be determined by the Race Director and communicated by Supplemental Regulations, Bulletin or Driver Briefing.

When leaving the true grid, all Drivers must proceed at a greatly reduced speed until clear of any Team personnel. Any Driver who is unable to start the formation lap must indicate this to the marshals by opening the door. Marshals will be instructed to push any car (or cars) remaining on the grid into the team pit box or safe location as soon as all cars able to leave the grid have done so.

Overtaking during the formation lap is permitted only if a car is delayed when leaving its grid position and cars behind cannot avoid passing it without unduly delaying the remainder of the field. In this case, Drivers may overtake only to re-establish the original starting order. Any Driver who is delayed leaving the grid may be given the opportunity to regain their start position during the formation lap, providing they have not been overtaken by all other Competitors. The Race Director will designate in the Driver briefing a point on track after which no further overtaking will be permitted. If more than one Driver is affected, they must not overtake each other while attempting to resume their original starting position. Any manipulation Is subject to a penalty.

Any car that spins or stops on track during the formation lap(s) forfeits the ability to retake its original position in the field and is placed at the back of the running cars in the order it arrived. A drive-through penalty may be imposed on any Driver who, in the opinion of the Stewards, unnecessarily overtook another car during the formation lap.

All races will be a rolling start with two-column formation unless amended by instruction of the Race Director. When the instruction to pair up in the starting formation is given at the designated point, Cars are to form up by alternating sides starting with the first Car on the Pole side, second Car in line on the opposite side. In the event of a Car missing relative to the published Grid, Cars will fill the Grid according to the alternating process above.

9.6.4. Race Start

Track-specific instructions are given by the Race Director at the Driver briefing. Cars must not overtake the Safety Car until it has exited the racetrack. After the Safety Car has exited the racetrack, Drivers must maintain their pace and positions as on the formation lap or as instructed and must remain in formation approaching the Start. Overtaking by individual Cars within their column is prohibited until such time that each Car individually crosses the start line.

There will be ***separate*** Start flags for ***each*** group. ***Should an incident occur in Group 1 before Group 2 receives the start signal, the Starter may show a yellow flag instead***.

Official race clock starts on the first passing of the control line after the completion of the scheduled number of formation laps.

9.6.4.1. No Start/Wave Off

If the Starter waves off the scheduled start of a Race, no flag will be displayed at the starter stand. The Starter shall also call "no start" on the radio and may shake their head indicating "no". All flag stations shall display a motionless yellow flag. Cars must undertake an additional formation lap at a reduced pace, reform into the side by side, two-column formation per their original grid positions as directed and anticipate a start on the next crossing of the starting line or as instructed by Race Control. The race timing commences at the end of the prescribed formation lap(s) as listed in the Supplementary Regulations and/or Briefing Notes.

Should Group 1 receive the "no start", Group 2 will automatically also have a "no start".

9.6.4.2. Pit Lane Start

Any car which is in the pits can start from the pits, but only under the direction of the marshals. It may be moved to the pit exit only with the Driver in position. Cars will join the race when the whole field (both ***Groups***) has passed the pit exit on its first racing lap.

9.6.4.3. False Starts

Any breaking of formation, manipulation of pace, or overtaking within the column will be reviewed and may be penalized. The Race Director and/or Stewards may use any video or electronic means to assist them in reaching a decision regarding false starts.

9.6.5. Safety Car / Full-Course Yellow - General

The Safety Car will be deployed under the instruction of the Race Director to neutralize a race. The Safety Car procedure will be signaled using any combination of the following: Double-standing yellow flags, In-car lights/displays, announcements via RC radio frequency, and/or Timing Screen messages. The Official time of the Safety Car period will be as shown in the Timing System. At the first indication of a Safety Car period, all cars must slow as directed – overtaking is prohibited. The Safety Car will be deployed to pick up the Overall Leader. Cars may be permitted to overtake slow or disabled vehicles only with instruction from Race Control.

During any SC / FCY period, the Pit Exit will be closed from the time the Safety Car is perpendicular to the first available pit box (closest to Pit Exit) until such time that the main group of Cars (packed up, in formation behind the Safety Car) has passed the Pit Exit. The Pit Exit will be controlled by an Official with a red flag.

9.6.5.1. Safety Car / Full-Course Yellow

From the first notification of a Safety Car / Full Course Yellow (SC/FCY) period, the pit lane will be closed.

a. Should the Safety Car pick up a Car other than the overall leader, Race Control may instruct an initial wave-by of Cars until such time that the first Car in line behind the Safety Car is the overall leader. Any such Cars instructed to pass the Safety Car must do so on the right and remain in order, in single file.

b. Should any Cars remain in line between the Safety Car and their respective class leader, Race Control may instruct a "Pass-Around." Cars eligible for the pass-around must move to the right at the direction of Race Control in preparation for the Pass-Around. Once the instruction to commence is given, eligible cars may pass the field and Safety Car in order, in single file. Cars not eligible for the pass-around should remain to the left and there should be no tire scrubbing.

c. Once the Pass-Around is complete, Race Control shall announce the Pit Lane will be open for Group 1 cars. On the lap following the pits opening for Group 1, Race Control shall announce the Pit Lane will be open for Group 2 class cars. On the lap following the Pits opening for Group 2, the Pit Lane shall remain open for all cars. Cars entering a closed Pit Lane or entering the Pit Lane out of sequence (open for the other Class), will be considered to have entered a Closed Pit Lane and are subject to the provisions in Article 9.6.5.2.

d. Once the running order has been re-established following the opening of the Pit Lane for Group 2, should any Cars remain in line between the Safety Car and their respective class leader, Race Control may instruct a "Final Wave-By." Cars eligible for the Final Wave-By must move to the right at the direction of Race Control in preparation for the Final Wave-By. Once the instruction to commence is given, eligible cars may pass the field and Safety Car in order, in single file. Cars not eligible for the Final Wave-By should remain to the left and there should be no tire scrubbing.

e. Once the above procedures are complete and the Circuit is prepared to resume racing, the pending Restart will be announced. (Article 9.6.6)

9.6.5.1.1. "Quick SC / FCY" Procedure

Should a SC / FCY period be implemented within (30) minutes of the preceding Green Flag (Initial race start or subsequent restarts), or with less than (30) minutes remaining in the Race, Race Control will announce the period to be considered a "Quick SC / FCY." Except in the last (30) minutes of the Race, there will not be two consecutive Quick SC / FCY periods.

For a Quick SC / FCY:

a. From the first notification of a "Quick Safety Car / Full Course Yellow" (SC/FCY) period, the pit lane will be closed.

b. Race Control may instruct an Initial Wave-By and Pass-Around (if applicable) as in Article 9.6.5.1.a-b

c. The Pit Lane will remain closed

d. The Restart will be given as in 9.6.6

e. The Pit Lane will be opened once all Cars take the Restart on the Track. All Cars must cross the Control Line on Track prior to entering the Pit Lane following a Quick SC / FCY.

Cars not eligible for the Pass-Around which overtake the Safety Car during the Pass-Around procedure may be subject a minimum penalty of a Stop + time penalty (stop time to be determined by duration of (2) laps).

9.6.5.2. Emergency Stops & Entering a Closed Pit Lane

Any Car entering a closed pit lane may only undertake the following actions:

a. Drive through the pit lane without stopping. Such action will require no further action nor incur penalty.

b. Make an emergency stop to fix or address any physical damage (replace a damaged tire, repair crash damage, or repair other damage inhibiting the Car from circulating safely). Flat spots are not considered damage for the purposes of an emergency stop.

c. Make an emergency stop for a Driver who risks exceeding maximum Drive Time (continuous or total).

d. Make an emergency stop for fuel. In the case of an emergency stop for fuel, the Team must inform an Official of the intention and the Car may take a maximum of (6) seconds of fuel. No other work may be performed.

Any Car undertaking an emergency stop must, at minimum, return to the Pit Lane and complete a drive-through on the lap after the Pit Lane is open for Group 2. Additional work may be performed beyond the minimum drive-through. Cars undertaking Emergency Stops for fuel must return to the Pit Lane on the lap after the Pit Lane is open for Group 2 and undertake a full pit stop including refueling.

9.6.5.2.1. Emergency Stops During Quick SC / FCY Periods

In the case of a Car requiring an emergency stop for any purpose during a Quick SC / FCY period, the Car is required, at minimum, to return to the Pit Lane and complete a drive-through on the lap in which the Pit Lane is opened. Cars undertaking an emergency stop for fuel are required to return to the Pit Lane on the lap in which the Pit Lane is opened and undertake a fill pit stop including refueling, subject to the minimum pit stop.

Cars entering a Closed Pit Lane and remaining in the Pit Lane for more than (2) laps from the time the Car entered the Closed Pit (counted by the Overall Leader crossing the Control Line twice) will not be required to undertake the additional actions detailed in Article 9.6.5.2 to satisfy the requirements of the Emergency Stop.

Cars entering a Closed Pit Lane and performing more than what is considered emergency service in Article 9.6.5.2. may be subject to a minimum penalty of a Stop + 60 seconds.

Cars failing to satisfy the requirements for undertaking an emergency stop may be subject to a minimum penalty of Stop + 10 seconds.

9.6.6. Restart

Once the Race Director is satisfied that racing may resume, the Safety Car lights will be switched off by a designated location of the track, and all yellow flags will be withdrawn. All cars must maintain a single file formation and remain at the speed set by the safety car at the time the Safety Car lights were extinguished. Any manipulation of pace or formation may be penalized. A green flag will be displayed only at the start line to signify the resumption of the race. Passing is permitted on the display of the green flag. Cars will take the restart in the current order in which they run on the track, there will be no pass-around or wave-by procedure.

9.6.7. Drive Time – General

Drive time is calculated for all starting Drivers from the Official Start Time of the Race to the time at which the Car crosses the Pit Entry loop. Subsequently, Drive Time is calculated from the time the Car crosses the Pit Exit loop to the time at which the Car crosses the Pit Entry loop. Time spent in the Pit Lane will not be counted towards Drive Time for any Driver. Drive Time ceases to be calculated for all Drivers at the time at which the prescribed race time expires.

Drive Time for Cars disabled or otherwise returning to the paddock directly from the track will cease to be calculated based on the most previous crossing of the Control Line (Start Finish) prior to leaving the track.

Should a Car miss the pit entry loop, Drive Time will be considered to have ceased at the crossing of the Control Line (Start Finish) on the lap prior to entering the pit lane.

In the event of a red flag, Drive Time will cease to be calculated for all Drivers at the time of the display of the Red Flag. Drive Time calculation will resume at the time at which the Timing System displays the resumption of the Race under SC/FCY.

Cars with a Driver ***who*** exceeds the cumulative Maximum Drive Time ***by up to 5 minutes will serve a drive through penalty***. Cars with a Driver ***who*** exceeds the cumulative Maximum Drive Time by ***more than*** 5 minutes will be moved to the bottom of the Results and be classified as last in class, except in the case of force majeure (at the sole discretion of the ***Sporting Director***). If two or more Cars are subject to Drive Time penalties, they shall be ordered in the order in which they finished prior to the application of any Drive Time penalties.

Cars with a Driver that exceeds the consecutive Maximum Drive Time will be penalized with a stop + time penalty (time over maximum).

In all cases of Drive Time length, additional requirements and/or restrictions may be detailed in the Supplemental Regulations.

9.6.8. Drive Time Limits

A driver may not drive more than 3 hours consecutively in any five-hour period (clock time, not the elapsed race time), nor exceed ***5*** hours cumulative (race time), as measured via Article 9.6.7 above. This restriction applies even if the driver is registered to drive for more than one Entry.

9.6.9. Pit Stops – General

During the Race, no more than the following number of crew are permitted over the wall at one time:

(4) Mechanics (for fueling, tire changes, affecting repairs, replacing parts, refilling fluids)

(1) Driver Assistant (may only tend to the Driver, including drink bottles/fluids and tending to the Driver comfort/cooling system) (May be the outgoing Driver, in which case no additional Driver Assistant is permitted until the outgoing Driver is behind the wall).

Anytime any refueling equipment is over the pit wall, all crew members over the wall must be properly attired in wear fire resistant clothing (including ***helmet***, fire suit, balaclava, gloves, socks, and shoes). ***The helmet must be*** a full-face helmet meeting FIA Technical List No.25 standard and within published expiration dates displaying the approved decal, or Snell SA2010, SA2015, SA2020 or SA2025. These crewmembers, in addition to the 'deadman operator' must also wear fire resistant clothing (including fire suits, balaclava, gloves, socks, and shoes) meeting FIA 8856-2000, FIA 8856-2018 or SFI standards (as listed in Articles 20.1.3 through 20.1.7), or as approved by the ***Technical Inspectors***. Fire resistant clothing may not be modified, and all certification tags must be present. See Article 18.

Once all refueling equipment is back behind the pit wall, crew members may work on the car wearing standard pit attire – closed-toe shoes, long pants, long sleeve shirt, socks.

Until such time that a Car has come to a complete stop in their designated Pit Box, all Crew (including Driver) and equipment must remain behind the dashed line delineating the Working Area. While undergoing any work, the Car engine must be off (work includes refueling, tire changes, Driver changes, while on jacks, and any other service). All equipment over the plane of the wall must be kept under control and must not be left unattended or unnecessarily placed in such a manner that could inhibit a Car from entering or exiting their respective Pit Box. Car engines may be restarted only once off the jacks and once all work is complete. Cars may be restarted while on jacks for checks only with permission from Officials. In all cases, the engine must be off when the Car is lowered from the jacks. All Crew (including outgoing Driver) and equipment must be positioned behind the dashed line prior to the Car leaving the Pit Box.

A maximum of (1) wheel gun (pneumatic only, during refueling) or mechanical tool may be in the working area at any time to perform a tire change. Should additional tools be used, all tools will be subject to inspection. Battery powered tools are prohibited during refueling.

All teams must have a minimum of (2) fire extinguishers in their assigned pit box at all times. Minimum 10 lbs ABC type extinguisher.

An on-board air jacking system or a manually operated external jack may be used to lift the vehicle. When using an external jack, only one jack per vehicle can be used during a pit stop. Helicopter booms for air hose management are permitted.

Whenever a Crew member is working under a Car, approved stands or safety supports must be in place under the Car.

Work may be performed in pit lane, unless the work is expected to take more than 30 minutes, in which case the car should be returned to the team paddock area to complete the work.

No refueling is permitted starting 15 minutes before the scheduled end of Race Segment 1. See Article 9.6.13.

Pit Lane will be closed starting 5 minutes before the scheduled end of Race Segment 1. See Article 9.6.13.

Crew members shall not sit on the pit wall during any track session.

9.6.10. Pit Stops – Time Requirements

As detailed in the Event Supplementary Regulations. Each team must complete a minimum of ***4*** pit stops of 4 minutes duration each or more during the race. Pit stops will be timed from pit entrance to pit exit timing lines. The distance of pit lane will be documented in the Supplemental Regulations or Drivers Briefing Notes.

During any Pit Stop during the Race, the following general prescriptions apply:

- Fueling as prescribed in Appendix 1. Only a driver change may be performed during the refueling. No other work is permitted until the refueling equipment is back over the pit wall.

- At any point during a pit stop, a maximum of four (4) crew members, not including the driver or driver assistant, are permitted over the wall at any given time, as allocated in Article 9.6.9. Any crewmembers over the wall in excess of the four (4) permitted will be considered to be working on the Car and may be penalized.

9.6.11. Finish

9.6.11.1. The end-of-race signal will be given to the Overall Leader on-track at the Control Line. The Overall Leader is the Car that has covered the greatest distance after the expiration of the scheduled race time, plus one lap. In the case that the Overall Leader is not on-track at the time the race clock expires, the end-of-race signal will be based on the next-highest running Car on-track.

9.6.11.2. In the case of a dead-heat (two Cars crossing the Control line as the same time, as registered in the Timing System), visual confirmation may be used to identify the winning Car. In the absence of conclusive images or video, the winner will be deemed to be the Car that started the Race further back on the Starting Grid.

9.6.11.3. Should for any reason the end-of-race signal be given before the leading car completes the prescribed time has been completed, the race will be deemed to have finished when the leading car last crossed the Control Line before the signal was given.

9.6.11.4. Should the end-of-race signal be delayed for any reason, the race will be deemed to have finished when it should have finished according to the scheduled time or distance.

9.6.11.5. After receiving the end-of-race signal all cars must proceed on the Circuit directly to the Parc Fermé, or as otherwise instructed, without stopping and without any assistance (except that of the marshals, if necessary). Any car which cannot reach the Parc Fermé under its own power will be placed under the exclusive control of the marshals who will take the car to the Parc Fermé.

9.6.12. Suspending the Race - Safety

If deemed necessary, the Race Director may suspend the Race. Upon the announcement and/or display of the red flags, all Cars able to do so must safely proceed directly to the Pit Lane or to another position on the track as directed by the Race Director. Cars must stay in order, in the designated lane and not report to their pit box, unless instructed to do so. No work is permitted on Cars unless authorized by the Race Director over the RC radio frequency.

When the Race Director determines that it is safe to resume, the Safety Car will the field out from pit lane to restart the race under Full Course Yellow.

The restarting of a race after a red flag shall provide for the following cases:

- If less than 2 laps have been completed by the leader since the start of the race or segment, the cars will start from their original grid positions (or segment grid).
- If more than 2 laps have been completed by the lead car, the grid for the restart shall be set by the running order at the last fully complete lap.

If a race is stopped before the full distance or time has been achieved and the race is not restarted, then the results will be declared according to the running order when the leading car crossed the control (timing) line for the penultimate time before the race was stopped.

9.6.13. Suspending the Race – Segments

There is one scheduled Race suspension – the end of Race Segment 1 for the Ceremony.

All refueling must stop 15 minutes before the scheduled end of the Segment 1.

Pit Lane will be closed 5 minutes before the scheduled suspension. Only cars serving a mechanical (Black with Orange Disk Flag) or stopping for safety reasons may enter pit lane for work until after the race is resumed.

The driver in the car at the end of Segment 1 must resume in the same car to start Segment 2. The Ceremony must not be used for a driver change.

Cars stopped in pit lane before the suspension will be allowed to exit pit lane behind the last car on track.

The restart after the segment suspension will resume as a single file restart behind the Safety Car (see Article 9.6.6).

10. Title and trophies

10.1. Podium and Awards Ceremonies

Trophies will be awarded at the conclusion of the Race to the 1st, 2nd and 3rd placed Drivers in each Class. Any Trophies or Awards issued prior to the publication of the Final Results are subject to review and may be ordered to be returned should the Results be changed by way of Review or Penalty. Any Competitor failing to adhere to any such instruction may be prohibited from future participation in the Event. Awarding of all Trophies, Awards, and Prizes is subject to the respective Classes meeting the minimum participation requirements in Article 4.

The ceremony starts with ascending the podium and ends with leaving the podium after the group pictures for the press. At all times during the event, including the Podium Ceremonies, all Drivers and Crew must be in compliance with all provisions of the Style Guidelines regarding branding and logos. Drivers or Crew not in compliance may be penalized, up to and including the loss of Championship points.
Any violation of this regulation may be penalized by the Stewards. The payment of the penalty does not preclude any further penalty.

11. Protests and Appeals

11.1. Right to Protest and Time Limits

11.1.1.1. A protest as to the validity of an entry, rejection of an entry or length of course lies only with the entrant and must be lodged at least twenty-four (24) hours before the start of the Event.

11.1.1.2. Technical protests regarding another Competitor or the Technical Director regarding specifications that are routinely inspected by the Technical Director are not permitted.

11.1.1.3. A protest regarding the scorers, timekeepers or award of positions lies only with the entrant and must be lodged within thirty (30) minutes, or as prescribed in the entry form, after the official posting of results.

11.1.1.4. A protest regarding the scorers, timekeepers or award of positions lies only with the entrant and must be lodged within thirty (30) minutes, or as prescribed in the entry form, after the official posting of results.

11.1.1.5. A protest against any actions of another Competitor are not permissible

11.1.1.6. A protest against any actions taken by race officials are not permissible

11.1.1.7. The following matters which involve the exercise of judgement by the Race Director and/or Stewards are not subject to protest and the decision is final and binding:

11.1.1.8. The decision to call for or not call or to end a neutralization of the Race.

11.1.1.9. The decision of the Steward to signal a Driver to pass the Safety Car under yellow or the Steward's judgement as to whether a proper passing signal was given.

11.1.1.10. The matter of whether a penalty could or should be applied or imposed during or after the race.

11.1.1.11. The decision as to whether to red flag the race

11.1.1.12. The decision to reposition a car for a starting or restarting violation.

11.1.1.13. The decision to impose a detention or disqualification penalty during a competition.

11.1.1.14. The decision to amend or adjust the Event Schedule.

11.1.1.15. Any other matters which may be designated as are not subject to protest in these rules

11.1.1.16. Protests of actions taken by the Director of Competition, including suspensions, must be lodged within twenty-four (24) hours after formal notification of the action.

11.1.2. Submission of Protests

When the Race Director pronounces the penalty at a race meeting, related protests must be submitted to the Race Director. All other protests must be submitted to the Director of Competition.

11.1.3. Content of Protests

Protests shall be in writing, accompanied by the prescribed protest fee and shall clearly state the errors that are claimed. Each claimed error must be stated in specific rather than general terms

Protests shall be in writing accompanied by the prescribed protest fee and shall clearly state the errors that are claimed. Each claimed error must be stated in specific rather than general terms and must be accompanied by a written statement of the facts and grounds upon which it is based.

11.1.4. Protest Fees

Protest fees shall be as follows: $1,000.00

11.1.5. Adjudication of Protests

When the Race Director pronounces the penalty at a race meeting, related protests shall be decided by the Stewards. The Director of Competition shall decide all other protests. The protestant and any entrant or other participant in interest shall be entitled to be heard and given an opportunity to call witnesses and shall be given adequate notice of the hearing. The hearing shall be informal and shall be confined to the errors claimed in the protest and evidence relevant to those errors.

11.1.6. Withholding of Awards

An award gained by a Competitor who is subject to a valid protest shall be withheld until the protest has been finally adjudicated in accordance with these rules.

11.1.7. Judgement

All parties concerned shall be bound by the decision given, subject only to Appeal as hereinafter provided.

11.1.8. Default of Right to Protest

Any contestant who voluntarily competes in any competition, which is not in accordance with the entry conditions as published, thereby waives the right to protest against the non-enforcement of such conditions.

Compliance with Procedure - Any protest, which fails to comply with the foregoing requirements, may be denied and disregarded. Any error not specifically raised in the protest shall be deemed to have been waived.

11.2. Appeals

11.2.1. Initiation of an Appeal

Any member or License holder who is entitled to appeal may submit a written Notice of Appeal, but any such action shall not be stayed because appeal is taken.

11.2.2. Content of the Appeal

The Notice of Appeal must contain reference to the specific action by ***VRoR*** from which an appeal is taken, the date of the occurrence, the reasons why the member or License holder is appealing, and specific reference to any Rules and/or Bylaws allegedly violated and the relief requested.

The Notice of Appeal must be accompanied by copies of all written documents pertaining to the appeal, such as protests, responses, rulings, announcements, etc.

The Notice of Appeal must clearly and explicitly state the appeals classification under which it is submitted and must be accompanied by the appeal fee required for that classification. The appeal fee shall be in addition to any monetary penalty previously assessed.

The original Notice of Appeal must be received by ***the Sporting Director no later than 11:59pm of the final day of the Veterans Race of Remembrance event***.

11.2.3. Nature of the Appeal

VRoR recognizes Appeals of the following natures:

Conduct or Result of a Competition - Appeal from a decision of a Steward's Protest Hearing per the Official Competition Rules.

Appeal Fee: $2,000 or 5% of any award claimed, whichever is larger
Recipient: ***Sporting Director*** (include a copy of the original protest)
Time Limit: By ***11:59*** p.m. EST of ***the final day of the Veterans Race of Remembrance event***

Discipline of a Participant - Appeal from a decision of the Director of Competition under Section 12.02 of the By-Laws.

Appeal Fee: $2,000 or 10% of any associated monetary penalty, whichever is larger.
Recipient: President
Time Limit: By ***11:59*** p.m. EST of ***the final day of the Veterans Race of Remembrance event***

Discipline of a Member - Appeal from a decision of the President under Section 12.03 of the By-Laws.

Appeal Fee: $2,000 or 10% of any associated monetary penalty, whichever is larger
Recipient: President
Time Limit: By ***11:59*** p.m. EST of ***the final day of the Veterans Race of Remembrance event***

Action or Inaction of the Corporation - Appeal from circumstances not otherwise classified, and falling within the scope of Article 13 of the By-Laws.

Appeal Fee: $2,000 or 25% of any monetary damages claimed, whichever is larger
Recipient: President
Time Limit: By ***11:59*** p.m. EST of ***the final day of the Veterans Race of Remembrance event***

11.2.4. Adjudication of the Appeal

The recipient of the Notice of Appeal may dismiss appeals, or portions thereof, on the basis of procedural noncompliance. Any appeal, or portion thereof, not so dismissed shall be submitted by the recipient to a Court of Appeals for adjudication. The submission to the Court of Appeals may specify the issues to be heard by the Court, including the issue of procedural compliance. The jurisdiction of the Court is limited to those matters and issues submitted to it by the recipient.

VRoR Court of Appeals is the final court of appeals for any issues pertaining to this event, and all decisions are final.

11.2.5. The Court of Appeals

The Court of Appeals shall be selected by the Chairman of the Board. The Chairman of the Board, or their designate, shall serve as Chief Judge. Two other judges may also be selected to serve in addition to the Chief Judge. The other judges may or may not be Board members but shall not have actively participated in the circumstances cited in the Notice of Appeal nor have a personal interest in the outcome.

11.2.6. Hearing of the Appeal

The Court of Appeals may cause an investigation to be made into the matters surrounding the appeal and shall convene a hearing within thirty (30) days of receipt of the appeal unless mutually extended. The appellant and any member in interest shall be given adequate notice of the hearing and shall be entitled to be heard and call witnesses.

11.2.7. Conduct of the Appeal Hearing

The hearing will be conducted according to the following procedures:

11.2.7.1. A Court of Appeals hearing is not open to the public and admittance to the hearing is at the sole discretion of the Chief Judge.

11.2.7.2. The Chief Judge shall enumerate the parties and other necessary participants in the proceedings. The executive race officials shall be regarded as a party to an appeal from a Steward's Protest Hearing.

11.2.7.3. The Chief Judge shall exclude from the hearing room or from further participation in the proceedings any person who engages in improper conduct in relation to the hearing.

11.2.7.4. The Court of Appeals shall conduct the hearing in an informal manner.

11.2.7.5. The Court of Appeals shall not be limited to the technical common law rules of evidence required in judicial proceedings but shall be satisfied the evidence submitted is of a type on which it can rely.

11.2.7.6. All parties to the proceedings shall be allowed to present and cross-examine witnesses and to submit evidence, both oral and documentary.

11.2.7.7. The Judges of the Court of Appeals and the Counsel for the Court of Appeals may examine witnesses.

11.2.7.8. The Chief Judge shall exclude irrelevant, immaterial or unduly repetitious evidence.

11.2.7.9. The Court of Appeals shall consider only evidence introduced during the hearing and there shall be no transcript of the hearing unless the Court determines otherwise.

11.2.7.10. The Court of Appeals, in an appeal from a Steward's Protest Hearing, shall not consider matters appealed but not assigned as protestable error in the original protest, nor shall it consider matters not assigned as protestable error in the original protest.

11.2.7.11. The Court of Appeals shall not consider matters outside the scope of the submission by the recipient of the Notice of Appeal, except for procedural rulings by the recipient.

11.2.8. Structure of the Appeal Hearing

The Chief Judge shall ensure that the following structure is observed, in order as listed:

11.2.8.1. **Opening Statements** - The parties to the proceedings will be permitted to make opening statements, with the member making the appeal being the first to make an opening statement. In particular each party should be asked to state the issue(s) before the Court of Appeals and a brief summary of the position of the party with respect to such issue(s).

11.2.8.2. **Order of Proof** - The evidence shall be received by the Court of Appeals in the following order:

11.2.8.2.1. The member making the appeal shall first submit and present evidence in support of the appeal, both oral and documentary.

11.2.8.2.2. Upon the completion of direct examination, each witness shall be subject to cross-examination by the other parties, or by any judge of the Court of Appeals or Counsel for the Court of Appeals.

11.2.8.2.3. Parties representing ***VRoR***, USAC and other parties, if any, against whom the appeal is taken shall then be allowed to present evidence, both oral and documentary.

11.2.8.2.4. Any witnesses thus presented shall likewise be subject to cross-examination by the appellant, by other parties, and by any member of the Court of Appeals or Counsel for the Court of Appeals.

11.2.8.3. **Closing Arguments** - Upon completion of the evidentiary portion of the hearing, all parties, beginning with the appellant, will be provided with the opportunity to make closing arguments.

11.2.9. Powers of the Court of Appeals

The Court of Appeals shall have the following powers:

11.2.9.1. To call, examine and cross-examine witnesses.

11.2.9.2. To receive and rule upon relevant evidence.

11.2.9.3. To regulate the course of the hearing and, if appropriate or necessary, to exclude persons or counsel for contemptuous conduct and to strike and disregard all testimony of witnesses refusing to answer proper questions.

11.2.9.4. To dispose of procedural requests, motions or similar matters.

11.2.9.5. To dismiss appeals or portions thereof.

11.2.9.6. To require a party at any time to state its position concerning any issue in the appeal or its theory in support thereof.

11.2.9.7. To pronounce a just remedy within the ***VRoR Regulations or*** USAC By-Laws and Official Competition Rules for the penalty, result or circumstance at issue, but it shall not be empowered to order any wholly or partly completed competition to be rerun.

11.2.9.8. To order the appellant against whom a final decision is rendered to pay all costs and expenses, including a reasonable attorney's fee, incurred by ***VRoR***.

11.2.9.9. To make such order as to the return or forfeiture of the appeal fee as it may think fit.

11.2.9.10. To take any other action deemed appropriate for a just and expeditious conclusion of the hearing.

11.2.10. Limitations

The Court of Appeals may interpret the rules and regulations and apply them to the particular facts presented to it, but it shall have no authority or power to create, add to, subtract from or in any way modify any of the rules and regulations or any of the supplements thereto, nor shall it have the authority to change a mandatory penalty, to modify the terms of the penalties authorized in the Regulations, or to create penalties not listed in the Regulations.

11.2.11. Publication of Judgement

The ***Veterans Race of Remembrance*** shall have the right to publish or cause to be published a judgement on appeal, and to state the names of all parties interested. The persons referred to in such publication shall have no right of action against the ***Veterans Race of Remembrance*** or the United States Auto Club or against any person publishing such notice.

11.2.12. VRoR Appeal Procedure Finality

Decisions of ***VRoR*** race officials on interpretation of rules, scoring of positions and penalties shall be final unless such decisions and penalties are protestable under these rules and are protested and appealed within the time limitations and other procedures prescribed by these rules. Any protest decision (having not been subject to Appeal) by a ***VRoR*** race official or any appeal decision by a ***VRoR*** Court of Appeals on these or any other matters to come before it shall be final and binding. No court action of any kind may be taken.

Any participant in ***the Veterans Race of Remembrance*** waives any rights such participant may have to be a party or to take any action in court seeking legal or equitable relief against any decision or action of any kind by ***VRoR*** or any of its race officials. A participant's exclusive right to contest a decision or the rules or regulations of ***VRoR*** is within the protest and appeal procedure of ***VRoR***, and any decision reached within this procedure is final.

VRoR is the final court of appeals, and all decisions by the Appeal Board are final.

11.2.13. Compliance with Procedures

Any appeal, which fails to comply with the foregoing requirements, may be dismissed and disregarded. Any error not specifically raised in the appeal shall be deemed to have been waived. Errors not specifically set forth in a Steward's Protest Hearing may not be considered on appeal.

12. Advertising, Media, and Television Rights

All copyright, sound and picture rights lie with ***VRoR***, including the pictures which are adopted by television broadcasts in the Event. All television rights of the Event, including terrestrial broadcast as well as cable, streaming and satellite television broadcast, all video rights, and all rights on the use of the complete electronic media, including internet, lie with ***VRoR***. Any kind of recording, broadcast, repetition, or reproduction for commercial purpose, particularly also distribution via social media platforms, without written agreement of ***VRoR*** is prohibited and can lead to high claims for compensation.

VRoR holds exclusive Media rights to all events, any content created by a credentialed media member, team representative or sponsor may not be used for commercial use unless pre-approved by ***VRoR*** and may be subject to media use fees.

VRoR reserves the right to receive copies of images, video, or audio content created at events by credentialed media. Any content used in social media postings, PR, or other articles written on behalf of the series will be credited to the creator.

VRoR reserves the right to demand content deemed harmful to the ***Veterans Race of Remembrance, Operation Motorsports*** or Competitors be removed immediately.

Access to any restricted areas for the purposes of content creation, filming, photography, or other media related activities require prior approval and the possession of the appropriate Media Credentials issued through ***VRoR***. The use of drones or other aerial devices is only permitted with the approval of ***VRoR***, respecting any venue requirements.

VRoR may refuse to permit and/or restrict teams and Drivers from displaying branding and or advertisements on any vehicle or attire which could be considered detrimental to the public image of ***VRoR***, the Event Organizers, or affiliates.

13. Specific Regulations

13.1. Paddock

13.1.1. Teams must also provide appropriate means of ensuring that awnings are secured robustly against weather/wind conditions and ensure these are maintained throughout the Event. In exceptional cases, ***VRoR*** reserves the right to permit the length of the awning to include the length of the tractor unit as well. This needs to be considered when planning for the awnings. Every Competitor must ensure that all safety relevant aspects of its team's working processes are fulfilled and observed.

13.1.2. Only the team trucks shall have access to the VRoR paddock. Small trucks and trailers shall only have access to the VRoR paddock for the purposes of loading and unloading during the official set-up and dismantling periods. Passenger cars, motorhomes and other vehicles are strictly forbidden and shall not have access to the paddock at any time. Unless decided otherwise by ***VRoR***, it is permitted to start dismantling the paddock only after the ***VRoR*** race has started.

13.1.3. The precise times for setting up and dismantling the paddock will be determined by ***VRoR*** for the Event and will be advised in writing at the latest 24 hours before the start of the Event in the form of an official "Team Information" communication. These times must be strictly adhered to. Any such requirements may be listed in the Official Event Schedule or Event Supplementary Regulations.

13.1.4. Team vehicles of any kind are to be driven in a safe manner when at the race facility and no vehicle shall be driven faster than 10 mph in the paddock.

13.1.5. No person shall ride in or on a car or other vehicle in an unsafe manner.

13.1.6. When a car is being refueled, or a device is being used that could precipitate a fire, such as a welding system, a crew member shall stand-by with a minimum of a 10BC fire extinguisher.

13.1.7. Any fuel transfer including refueling must not be performed under an awning, in a garage, or where fumes could accumulate.

13.1.8. Animals of any kind are not permitted in the pit or on the marked racetrack. Animals in the paddock must be restrained.

13.2. Pit Lane Allocation

Teams will be allocated a working area in the pit lane. Pit lane working areas to be assigned (when possible) in the order specified by the Event Organizer.

13.3. Track

Drivers must remain on the track at all times and may not leave the track without a justifiable reason. For the avoidance of doubt:

- An Official Lap is considered from control line to control line having, at minimum, a part of a tire in contact with the track at all times.
- The control (timing) line applies both to the track and to the pit lane.
- The outer edges of the curbing are considered to be part of the track.
- A Driver will be judged to have left the track if all four wheels of the car go beyond the outer edge of the curbing (no longer remaining in contact with the curbing), or outside of the delineating lines no longer remaining in contact with such lines) in the absence of physical curbing. Additional definition may be included the Driver Briefing and may be track specific.
- Any report made by a duly appointed Judge of Fact regarding a Driver having left the track must be accepted as a fact unless later independently corrected by the Judge of Fact or over-ruled by the Stewards. The Race Director and/or the Stewards may, at their sole discretion, review any report for the purposes of ensuring accuracy and consistency. This does not preclude the Stewards from exercising their right to over-rule, or accept a correction from, a Judge of Fact.

The following penalties may be applied for Drivers having driven outside of the limits of the Track, as defined above:

Practice

- Any Driver identified by a Judge of Fact as having left the track (unless for reasons beyond their control) may have that lap time invalidated.
- Any Driver who repeatedly leaves the track may be reported to the Stewards who may impose a penalty.
- Any Driver who repeatedly leaves the track and requires mechanical or technical assistance by the marshals may be prohibited from rejoining the relevant session. The decision to not permit a Driver to rejoin a session is final and is not subject to protest or appeal.

Qualifying

- Any Driver identified by a Judge of Fact as having left the track (unless for reasons beyond their control) may have that lap time invalidated.
- Any Driver who repeatedly leaves the track may be reported to the Stewards who may impose a penalty up to and including the deletion of all lap times or a grid-place penalty for the race. It is not a condition that the Driver must have been shown the Black and White flag before a penalty is applied.
- Any Driver who repeatedly leaves the track and requires mechanical or technical assistance by the marshals may be prohibited from rejoining the relevant session. The decision to not permit a Driver to rejoin a session is final and is not subject to protest or appeal.

Race

- Any Driver identified by a Judge of Fact as having left the track (unless for reasons beyond their control) may have that lap time invalidated.
- Any Driver identified by a Judge of Fact as having repeatedly left the track (unless for reasons beyond their control) be shown the Black & White flag as a warning.

- Any Driver who repeatedly leaves the track may be penalized. At the absolute discretion of the Race Director, a Driver may be given the opportunity to give back the whole of any advantage they gained by leaving the track. Any opportunity taken to give back any advantage does not preclude further penalties

13.4. Incidents

"Incident" means any occurrence or series of occurrences involving one or more Drivers, or any action by any Driver, which can be reported to the stewards by the Race Director (or directly noted by the stewards) which:

- Necessitated the suspension of a session *(full course yellow/red flag)*
- Constituted a breach of these Sporting Regulations or event specific instructions.
- Caused a false start in a race by one or more cars.
- Caused a collision (with or without direct contact)
- Forced a Driver off the track (with or without direct contact)
- Illegitimately prevented a legitimate overtaking maneuver by a Driver.
- Illegitimately impeded another Driver during overtaking.

Unless it was completely clear that a Driver was in breach of any of the above, any incidents involving more than one car may be investigated after the session. It shall be at the discretion of the Stewards to decide, upon a report or a request by the Race Director, if a Driver or Drivers involved in an incident shall be penalized.

13.5. Stewards' Inquiries

The Stewards may hold inquiries into incidents observed by them or referred to them by the Race Director, Technical Scrutineers, or other parties. The Stewards may seek evidence from any source they choose – in the case of incidents on track the Race Director shall present any video evidence available and at any time requested by the Stewards, including during inquiries with Competitors and Drivers. Drivers attending Stewards' inquiries must always be accompanied by an authorized representative of the relevant Entrant.

Team provided video or data will only be allowed if requested by ***the Sporting Director***.

13.6. Penalties

At the individual events the Stewards (and the Race Director where specified in these regulations) are responsible for imposing penalties to the participants, including Competitors, teams, and Drivers. In addition to these Regulations and the USAC Regulations, the following circumstances or offences may also incur penalties up to refusal of permission to participate, or disqualification of a participant from the event:

- Non-compliance with the prerequisites for participation
- Non-compliance with the Regulations in the code
- Unsporting behavior
- Failure to comply with the instructions of ***VRoR officials***
- Refusal to undergo a car check that has been ordered

If any special examinations or investigations are required and ultimately lead to a penalty being applied by the Stewards, then the costs of such examinations or investigations shall be met by the Competitor.

Whilst the Stewards may impose any penalty they consider appropriate for a breach of the regulations, Article 20 contains a set of guideline penalties that will be considered, up to and including disqualification from participating in the next event. Penalties may be applied during any Sanctioned Test Sessions or during the Official Event.

Should the Stewards decide to impose either a Drive-Through or a Stop-and-Go penalty, the following procedure will be followed:

1. The Stewards / Race Control will give notification of the penalty which has been imposed to the Competitor concerned by means of a broadcast on the Race Control radio or via a Pit Official.
2. From the time the Stewards' decision is notified on the timing monitors the relevant Driver may cross the control (timing) line on the track no more than twice before entering the pit lane. In the case of a Drive-Through penalty the Driver must proceed down the pit lane and re-join the race without stopping. In the case of a Stop-and-Go penalty, the Driver must stop in the designated area where they shall remain for the prescribed stop time.
3. The designated area for Stop-and-Go penalties to be served will be in the Competitor's designated Pit Box. When the prescribed stop time has elapsed, the Driver may re-join the race.
4. Unless the Car was already in the pit entry for the purpose of serving a Drive-Through or Stop-and-Go penalty, penalties may not be served while the Safety Car has been deployed. The number of times the Driver crosses the control line behind the Safety Car will be added to the maximum number of times they may cross the control line on the track prior to serving a penalty.
5. Whilst a car is stationary in the pit lane as a result of incurring a Stop-and-Go penalty it may not be worked on. However, if the engine stops it may be started after the prescribed stop time has elapsed.
6. Should either a Drive-Through or Stop-and-Go penalty be imposed and notified during the last five laps/ten minutes or after the end of the race, or cannot be imposed for operational reasons, then at the discretion of the Stewards, the procedure above may not apply and the penalty may be converted to a time penalty which will be added to the overall elapsed time of the car concerned. The time added to the overall elapsed time for a post-race/unserved penalty shall be the pit lane delta at the pit lane speed limit, plus 5 seconds, plus any "stop time," if applicable. Such penalties may be calculated to equal multiple laps, if applicable.
7. For any breach of the regulations during free practice, the Stewards may (as an alternative to or in addition to any other penalty) impose a hold, which they may order to be taken at the start of the subsequent Free Practice or Qualifying session, in which case the car concerned may not leave its pit lane working area at the start of the session until the prescribed stop time has elapsed.
8. Any breach or failure to comply with the above procedure may result in the car being disqualified.

In addition to the penalties and process above, time penalties may be added to the total minimum time of the subsequent pit stop involving fueling and/or Driver change. Failure to fulfill requirements of any such penalty may result in additional penalties or the conversion of said penalty to a post-race time penalty (plus drive through equivalent + 5 seconds, if applicable).

Any fine imposed by the Stewards are payable within 48 hours of their notification to ***VRoR***. Where a fine is imposed, continued participation in the Event may not be permitted until any fine imposed is paid in full.

14. Safety

14.1. Extrication Exercise

VRoR, in conjunction with the event medical personnel, may elect to hold an Extrication Exercise at the event. ***VRoR*** shall nominate a team and Driver to take part in the exercise. The team and Driver must comply with this request and have the nominated car and Driver, with all racing equipment, available at the designated date and time in the paddock, in full race condition. Failure to comply with this regulation may result in a penalty.

14.2. Pit Lane Safety

14.2.1. The maximum speed in the pit lane during practice, qualifying and each race is 60 kph and will be monitored by the Race Director and the Stewards. Drivers exceeding the permitted maximum speed during free practice or qualifying sessions may be penalized, including by Stop-and-Go penalties during either of those sessions or a drop of grid places for the race. Drivers who repeatedly exceed the permitted maximum speed in the pit lane during free practice and/or qualifying may face additional penalties for speed limit violation. Drive through or Stop-and-Go penalties may be issued if the permitted maximum speed in the pit lane is exceeded during a race.

14.2.2. For the start of a Free Practice or Qualifying Session (and subsequent stoppages during these sessions) Cars may queue at the pit exit OR proceed to their assigned pit box. Cars electing to start/restart a session from their pit box must remain in their pit box until released over the Race Control frequency or by a Pit Official.

14.2.3. The outer (fast) lane must be kept unobstructed at all times to allow safe passage of cars driving at the pit lane speed limit. Disabled cars or cars otherwise not driving at the pit lane speed limit must use the transition lane (center lane). It is the responsibility of each Competitor to release their car from the working area safely. Cars in the fast lane transiting at the pit lane speed limit shall have priority over those leaving the working and transition lanes.

14.2.4. Unless instructed otherwise by the Race Director, during all practice and qualifying sessions cars must be parked parallel to the pit wall whenever they are stopped in the team's pit area. When a car is ready to leave its pit area, the car may be pushed backwards (not reversed under its own power) with a team member responsible for ensuring the car is released safely and without impeding other cars.

14.2.5. The onus shall be on all Drivers to take due care and drive within the pit lane speed limit. Drivers must respect the designated pit entries and exits, details of which will be provided in the Drivers' Briefing.

14.2.6. Prior to the Start of any Test, Practice, or Qualifying Session, the Pit Exit will be closed, and Cars will not be permitted to enter the track. In most cases, the Pit Exit closure will be signaled by a Race Official with a red flag or a red light. The Pit Exit may be closed should a session be interrupted, or upon display of the checkered flag to end the session.

14.2.7. All equipment must be kept in a safe position towards the pit wall as soon as cars leave their pit areas at the start of and during practice, qualifying and races. No equipment may be left unattended on top of the pit wall unless it is firmly secured in position.

14.2.8. Competitors, team members, and Drivers are responsible for the conduct and safety of their guests in the pit lane area. Guests must be properly credentialed when in restricted areas. Any guest found in the pit lane without the correct pass will be excluded from the pit lane and the Competitor will be reported to the Stewards. No person under the age of 16 is permitted in the pit lane at any time.

14.2.9. Competitors, team members and Drivers must ensure that their guests always respect the pit lane regulations. It is the responsibility of each Competitor and/or Driver to give a briefing to each individual guest regarding pit lane safety.

14.2.10. Competitors team members and guests must wear closed-toe footwear in the pit lane at all times; open footwear is not permitted. Long trousers (not shorts) must be worn by team members. Competitors are responsible for informing their guests of suitable clothing standards when in the pit lane, including footwear and long trousers together with covered shoulders. Additional restrictions may be imposed by VIR - any such restrictions shall take precedence over these Regulations.

14.2.11. A maximum of 2 people per car shall be permitted access to a designated location for the purpose of signaling during any track session. Signalers may not be at the signaling area until after the start of the race.

14.2.12. Smoking or vaping is not permitted at any time in the pits.

See also the Refueling regulations in Article 17.

14.3. General Safety

14.3.1. Drivers are strictly forbidden to drive their cars in the opposite direction to the specified direction unless it is necessary to do so to move the car from a dangerous position. A car may only be pushed to remove it from a dangerous position as directed by the marshals. No car may be reversed in the pitlane under its own power.

14.3.2. At any time while on track, Drivers may only use the track and must always observe the provisions of these regulations relating to driving conduct on circuits.

14.3.3. If a car stops during any session or race it must be removed from the track as quickly as possible so that its presence does not constitute a danger or hinder other Competitors. If the Driver is unable to drive the car from a dangerous position, it shall be the duty of the designated safety / response personnel to help when possible. Drivers must put the car in neutral prior to exiting the Car or remain available to do so at the direction of the safety team. A Driver must always be within 50’ of the car and must leave the steering wheel in place. If any mechanical assistance is required to move the car, the Driver may be ordered to stay with the marshals / safety team and may not be permitted to re-join the session.

14.3.4. Except in fire or other immediately dangerous situation, Drivers are to remain in their car with all safety equipment in place until instructed by the marshals / safety team to exit the vehicle.

14.3.5. In practice and qualifying, any car that drives through and out of a gravel trap must go directly to the pits to be checked before continuing the session. In the race, an instruction will be issued by Race Control if a car must pit to be checked. In all cases when leaving a gravel trap, a Driver must re-enter the track offline and avoid depositing gravel on the racing line.

14.3.6. The Car's two headlights and two taillights must be illuminated when it is running on track during periods of darkness. The Technical Scrutineers may check the lights at any time until 15 minutes before the green flag. Should any lights fail during the session, no penalty will be imposed but the Race Director may direct a car to enter pit lane to address the situation if he considers this is causing an immediate safety issue.

14.3.7. MyLaps RaceLink unit is required for all cars (RaceLink Pro OR RaceLink Club versions are the only permitted versions). Units must be mounted in accordance with the Technical Summary Appendix instructions. In-car LED lights must be visible to the Driver from their normally seated position.

14.3.8. It is the Competitor's responsibility to always ensure proper installation and function of the MyLaps RaceLink system. Cars with non-functioning or inaccurate GPS signal may be stopped and ordered to repair. See Technical Summary for proper installation and maintenance.

14.3.9. Car-to-car radio transmission or communication is prohibited.

14.3.10. At the end of any session or race, each Driver may cross the Control (Timing) Line only once. Crossing twice after time has expired may result in penalty.

14.3.11. Only small two- and four-wheeled motorized paddock vehicles may be used within the paddock. These vehicles may only be used when driven by a current full road traffic license holder for race team related business and must be operated in a safe and respectful manner at all times. Recreational use is strictly prohibited. Private cars and vans are not considered as paddock vehicles. These allowances are subject to the venue or promoter regulations.

14.3.12. The speed limit in the paddock at each venue is 10 mph, or as posted.

14.3.13. Tailgates on transporters must remain in the up or closed at all times except when loading and/or unloading at the beginning and end of each event.

14.3.14. From the commencement to the conclusion of a Session, only a registered Driver in full safety equipment may drive the car on-to or off-of the Pit Lane.

14.3.15. The Race Director, or Safety Director can require a Driver to have a medical examination at any time during the Event. Any failure to comply may result in disqualification from the competition.

14.3.16. All compressed air bottles and hoses must not be more than 10 years old at the time of use, and they must show no signs of visible damage. All compressed air bottles must be protected from falling over at any time. Any attached pressure reducers, gauges or valves must be protected from releasing gas or breaking off should they fall over or be knocked or hit in any way.

14.3.17. All electrical generators and air compressors must be equipped with spark arrestors. They cannot be placed in the working pit lane. They must be located as far away from fuel containers as possible.

15. Flag Signals

Flagging will be the official method to communicate with ALL Competitors during all on track sessions. Flags may be replaced or supplemented by lights and/or reflective panels; these shall have the same meaning as the flags.

FLAG	Note: *Any flag signal may be accompanied by additional messages from Race Control* Flag signals are based on the recommendations of FIA Appendix H Article 2.5.4 and 2.5.5
	GREEN When displayed by the starter, signals the beginning or resumption of a session. Also shown (waved) on track following a yellow caution area to indicate passing may resume when beyond the green flag. Also shown for first lap of the first non-race session of the day for each series.
	BLACK/WHITE DIAGONAL (Shown with Number Board) Unsportsmanlike flag. Shown stationary to a Competitor once as a warning primarily for their driving conduct. Should further action be taken by the stewards, the team will be informed immediately
	BLACK (Shown with Number Board) Once displayed, the Competitor must stop at his pit box on his next approach to pit entry. If a Driver fails to comply for any reason, this will be an additional breach and subject to further penalty by the stewards. This flag will not be shown for more than four consecutive laps.
	BLACK with ORANGE CIRCLE (Shown with Number Board) Mechanical problem that may endanger the Driver or other Competitors. Competitor must report to pit lane immediately –failure to follow this instruction will result in a Black Flag being shown to the Competitor.
	SINGLE YELLOW **Stationary:** Reduce Speed, do not overtake, and be prepared to change direction. There is a hazard beside or partly on the track. Overtaking is prohibited until Competitor has passed a green flag. It must be evident that a Driver has reduced speed; this means a Driver is expected to have braked earlier and/or noticeably reduced speed in that sector. **Waved:** Increased danger – be prepared to change directions or stop. There is a hazard wholly or partly blocking the track and/or marshals working on or beside the track. Overtaking is prohibited until Competitor has passed a green flag. During free practice and qualifying, it must be evident that a Driver has not attempted to set a meaningful lap time; this means the Driver should abandon the lap (this does not mean he has to pit as the track could well be clear the following lap)
	DOUBLE YELLOW (Safety Car/Full Course Yellow – SC/FCY) Danger: Reduce Speed, overtaking is prohibited throughout the circuit. Flags are displayed at all stations. Incident areas may be covered with additional informational flags. SC/FCY may be used with or without a Safety Car. All Drivers must gather in single file behind the leader or Safety Car. FCY shall remain until the race is resumed and a green flag is shown.
	RED Session suspended. Use caution and proceed immediately to pit lane or a location as directed by Race Control. Overtaking is prohibited. Cars are considered under "Parc Fermé" conditions unless otherwise stated. Race Control will announce separately if the session will or will not resume.
	SOLID BLUE OR BLUE WITH YELLOW DIAGONAL Warning: faster/lapping cars are approaching. Use Caution. Exercise sportsmanship & allow racing room. If waved, this signals that another Driver is trying to overtake.
	YELLOW WITH RED STRIPES Caution, the racing surface may be affected by fluids or debris and may be slippery.
	WHITE **Start/Finish: WAVING**, Indicates last lap of a race. A LAST LAP board may be used. Both signals are advisory and are not required or guaranteed. **Corner Post: STATIONARY,** use caution as you are approaching slow moving vehicle. **WAVING,** use caution as you are approaching a very slow-moving vehicle or a moving Safety Vehicle.
	BLACK & WHITE CHECKERED Indicates completion of a session or race. All cars must exit the course once they have passed start/finish and received the checkered flag.

16. Penalty Table

The below table is a guideline for the application of penalties and may be modified/adjusted as necessary by the Stewards/Race Director. Penalties listed are the minimum actions to be taken in each instance. Additional penalties may be added as warranted.

General/Administrative

Violation	Practice	Qualifying	Race	Reference
Not attending mandatory briefings	Warning/5 Minute Hold/Grid Spot Penalty			7.2
Unregistered Driver	Invalidate all session times + 10 Minute Hold / Monetary fines			4.1
Unsporting Behavior	Exclusion from ***session***, Probation, Suspensions			3.4
Improper / Incomplete Branding	Monetary Fines / Prohibition from participating in post-race podiums & ceremonies (Increases with frequency)			10
Logistics / Paddock Offences	Monetary Fines			13.1

In-Session / Technical

Violation	Practice	Qualifying	Race	Reference
Pit Lane Infraction	Warning, Drive-Through	Warning, Drive-Through	Warning, Time Penalty, Drive-Through	14.2
Overtaking under local yellow flags	Stop + 3 Minutes	Grid position penalty, Loss of all times	Drive-Through	15
Overtaking at the time of FCY	N/A	N/A	Re-order, Drive-Through	9.6.5
Incident Responsibility	Stop + 10 Minutes	Grid position penalty, Loss of all times	10s Penalty, Drive-Through, Stop + Hold (Increases with severity/frequency)	13.4
2 x Checkered Flag, *Failure to obey Red Flag*	5 Minute Hold Next Session	Loss of Fastest Lap	Warning, Time Penalty	15
False Start	N/A	N/A	10s Penalty, Drive-Through	9.6.4.2
Improper Tires	N/A	N/A	Back of Class (Group) Start, Drive-Through Equivalent	19.7
Technical Non-Compliance	Loss of All Times	Loss of All Times	Moved to back of Class (Group), Disqualification	Technical Regulations
Non-Functioning RaceLink	Fix for next session, Stop & Repair	Fix for next session, Stop & Repair	Repair for next session, Stop & Repair	19.10
Exceed Drive Time Requirements			***Exceed by <5 minutes – drive through Exceed by >5 minutes, move to last in class.***	***9.6.7***

17. REFUELING INTRODUCTION

The rules below outline the equipment permitted for refueling in pit lane from an approved refueling container (Article 17.2 below) or a dedicated fuel rig (Article 17.3 below).

They are governed from FIA Regulations under Appendix J articles, 252, 253, and 257 pertaining to fueling.

17.1. General

17.1.1. The engine must be stopped before refueling can commence.

17.1.2. The car must have at all four wheels on the ground during refueling.

17.1.3. Driver changes may occur during the refueling. No other work may be performed during the refueling.

17.1.4. No cooling or pressurizing of refueling systems is permitted.

17.2. Fueling Containers

17.2.1. The use of dump cans to refuel cars is permitted, providing it uses a dry-break system.

17.2.2. An approved jerry can for refueling is permitted with the OEM fuel filler neck ***or manufacturer-provided system if using a fuel cell***.

17.3. Fuel Rigs

A single (One) autonomous supply tank complying to FIA Drawing 252-7 is permitted for refueling. (Ref. FIA Art 257a Section 6). ***VRoR*** officials have the ability to make the final decision with regards to compliance.

17.3.1. The tank must have a simple cylindrical internal shape without any additional internal parts to improve flow.

17.3.2. The top surface of the tank must be no higher than 2m +-4mm as measured in pit lane no further than 2 horizontal meters from the edge tank and above the track surface.

17.3.3. The top of the tank must be vented in accordance with FIA Drawing 252-7 and must incorporate a flame arrester.

17.3.4. The bottom surface must have flatness of <3mm inside the tank.

17.3.5. The bottom internal surface of the tank must be a single piece and not move.

17.3.6. Any device or process that modifies the internal pressure or temperature of the tank is prohibited.

17.3.7. A Weighing system (load cells) under the base of the tank is not permitted

17.3.8. A visible level “sight tube” is permitted but must have isolating valves.

17.3.9. The Fuel Rig components must be assembled without any degree of freedom in relation to the trolley.

17.3.10. The base of the fuel rig assembly must have a surface area of at least 2 m^2 and ballasted with a weight greater than that of the tank filled with fuel. Any Castors used must be self-braking.

17.3.11. Any pressurized containers (nitrogen bottles) used in the base of the assembly must be secured to prevent damage to the valve or regulators installed.

17.4. Diagram of Fuel rig components for FIA 252-7

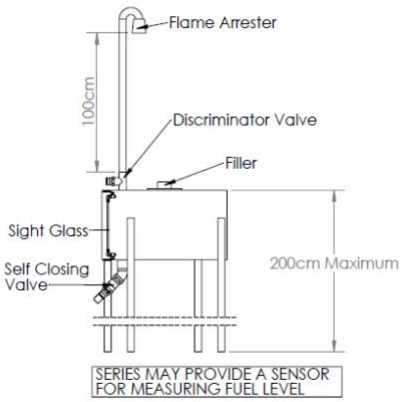

Discriminator Valve

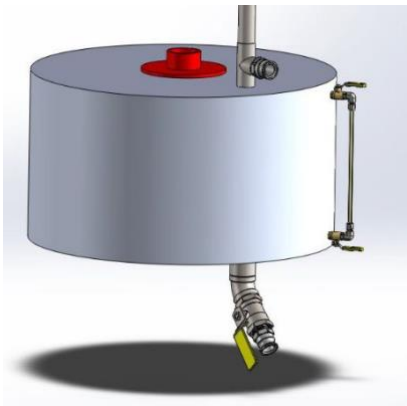

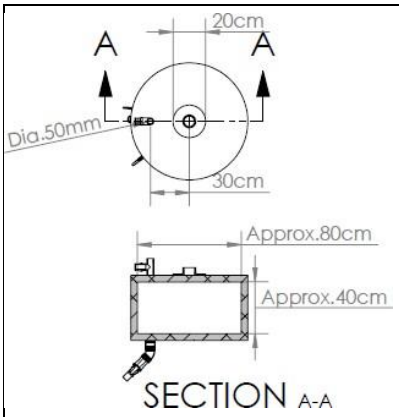

Discriminator Valve

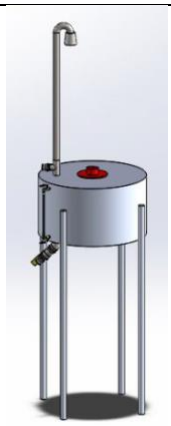

17.5. Self-Closing "Deadman" Valve

17.5.1. Must be installed after the fuel rig restrictor and always manned during re-fueling

17.5.2. Have a maximum internal diameter of 38 mm / 1.5". Typical examples are shown below.

Example of Self Closing Valves

17.6. Tank Level Measurement

If used, a visible level equipped with isolating valves fitted as close as possible to the tank must be mounted to the tank.

1.4.1 Sight Tube examples with isolating valves

17.7. Electrical Grounding

17.7.1. All Fuel rigs must be electrically grounded to “earth” via the ground wire running along the base of pit wall.

17.7.2. Diagrams showing grounding examples.

Fuel Rig Ground connection example.

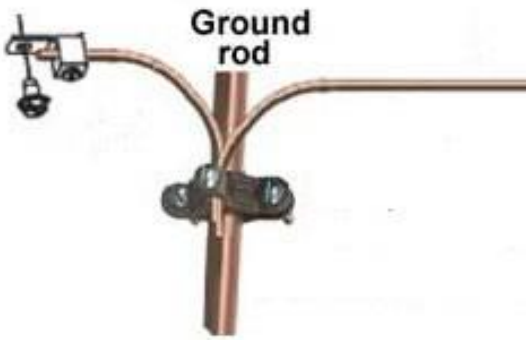

17.8. Re-fueling Booms, Overhead devices

17.8.1. Overhead arm/boom for supporting lines and hoses are permitted. Overhead booms for pit signs are permitted but must be approved by ***the Technical Director***.

17.8.2. Maximum Length is 4m and a minimum height of 2m over its entire length, including the accessories. d) Must incorporate an identification plate bearing the race number of the competing car.

17.8.3. Any lighting equipment installed should not face traffic, must be of a low temperature, flame proof, and located not less than 50cm from any refueling or ventilation lines. NOTE Halogen lights are not permitted.

17.9. Re-fueling Hose Length

17.9.1. Minimum length 4m. Measured from either end of the flexible hose and does not include any fittings. b) Use only the approved leak-proof fuel and vent connections shown in Article 1.8.

17.9.2. It must be provided with a leak-proof coupling to fit the filler mounted on the car.

17.9.3. During re-fueling the outlet of the air vent must be connected to the supply tank with an appropriate coupling of the same diameter.

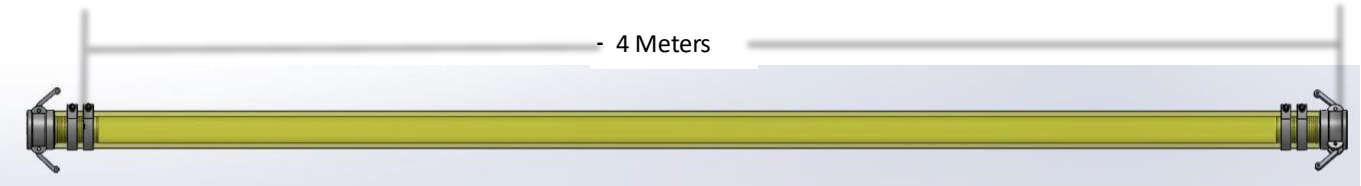

17.10. Fuel Fill & Vent Hardware

17.10.1. The locking connectors permitted should be “cam and groove” style and no larger than 1 ½ inch (38mm). b) “Cam and Groove” Fittings must unmodified and retain the original wall thickness.

17.10.2. Smooth interior faced (not grooved) hose clamps should be used to avoid cutting hose. See figure 1.8.1. d) Two (2) hose clamps or a “split hose coupling” are preferred for use on all fill lines

17.10.3. Examples of fuel and vent hardware / fittings

Female NPT – Cam/Groove	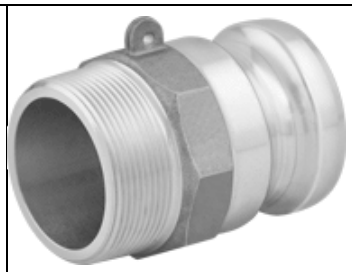 Male NPT	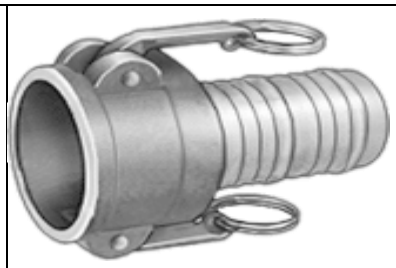 Barbed fitting

Not this type	Ok	Better	Better

	Examples of Split Couplings Better ? ?	

17.11. Fuel Fill & Vent Hoses

All hoses and fittings from the supply tank to the car and back must have a maximum inside diameter in compliance with FIA Drawing 252-5 (1.5 inches maximum for version A). Note all autonomous fuel rigs must also have a sealed container and a mating receptacle to the connector to empty the drain line after refueling.

18. Crew Requirements

18.1. Fueling Via dual Red Head

(3) crew members are required when using any other FIA approved, non-self-venting fill system.

18.1.1. One person operating the self-closing "Deadman" valve on the fuel supply tank.

18.1.2. One person operating the fill nozzle.

18.1.3. One person equipped with an approved 5kg (10lb) or greater fire extinguisher located behind the fueler.

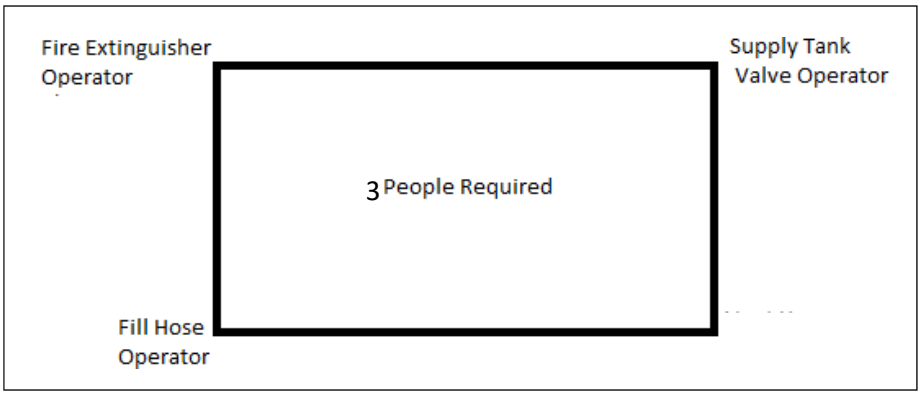

18.2. Helmets

All members of the fuel team are required to wear helmets meeting the specifications below. This includes the fueler, and fire extinguisher attendant.

18.2.1. Full-face helmets on FIA Technical List No.25 to a standard below and within expiration dates or Snell SA2010, SA2015, SA2020 or SA2025 are permitted.

18.2.2. During the refueling process, anyone over the wall – refueler, driver and driver assistant, vent operator, and fire extinguisher person – must have their visor completely closed.

18.2.3. Any exposed hair must be completely covered by protective, fire-resistant clothing.

18.2.4. All helmets must display the approved unaltered decal as shown below.

18.3. Fire Resistant Clothing

18.3.1. Only fireproof clothing meeting FIA 8856-2000, FIA 8856-2018 or SFI3.2A or higher is permitted, or as approved by a ***Technical Inspectors***.

18.3.2. All crew members operating the fuel nozzle, refueling rig or vent hose must wear overalls, gloves, balaclava, socks, shoes, and gloves.

18.3.3. All other crew members over the wall in the working area must be attired as detailed in Article 9.6.9.

18.3.4. Any Clothing must be unmodified and pass scrutineering checks.

18.3.5. Any Clothing must display the approved unaltered decal as shown in the examples below.

19. Vehicle Requirements

19.1. General

19.1.1. The interior rear-view mirror may be replaced by another of a different type and/or dimensions provided such replacement does not constitute a safety hazard in the opinion of the Technical Inspectors. A camera system is also permitted, again upon the approval of the Technical Inspectors.

19.1.2. Where changes are required to enable drivers with physical disabilities to compete, those changes must be approved by the Technical Inspectors and must not compromise the safety of the vehicle.

19.1.3. Oil coolers, transmission and differential coolers are permitted.

19.1.4. Additional brake cooling ducts are permitted.

19.1.5. Tow hooks or tow straps are required at each end of all cars. They must be capable of pulling the maximum weight of the car without failure. They must be obvious, or their location identified with the official international marking.

19.1.6. An approved rain light must be installed, and the driver must be able to activate while sitting normally in their race seat. It is recommended to use an FIA-approved rain light.

19.1.7. Master electrical switch(es) must be installed and shall disable the vehicle electric systems. It must be possible for either the driver or someone outside the car to disable the vehicle electrical systems. The switch must disable all vehicle electrical system, except for the fire extinguisher system. It must be installed on the positive side of the electrical system, not the ground. The terminals of the switch must be insulated. The switch must be identifiable with the official international marking. The off position must be clearly indicated.

19.1.8. All cars must have a minimum of two working headlights for all on-track sessions. Headlights must be on during all sessions. The Race Director may require repairs if one or more of the lights stops working during any session.

19.1.9. The rear brake lights must be operational at all times and controlled only by application of the service brake pedal or approved steering-wheel brake system by the driver. The center brake light must not be covered or obscured in any way.

19.2. Roll Cages

All vehicles are required to have a full roll cage.

Cages must be either a homologated and unmodified roll cage, or a roll cage built to comply with SCCA GCR, WRL Regulations, NASA Endurance Regulations, or ASN Canada Regulations.

Professionally manufactured bolt-in cases are allowed, provided that they are installed using the manufacturers provided or specified tools and hardware. Bolt-together cages are not permitted.

Roll cages shall be of seamless or DOM mild steel tubing (SAE 1010, 1020, 1025) or equivalent, or alloy steel tubing (SAE 4125, 4130) or Docol R8® tubing. ERW tubing is not permitted. Minimum inch sizes and materials for front and main hoop tubes are as follows:

Vehicle Weight without driver	All Approved Materials
UP TO 1,500 lbs.	1.375 X 0.095
1,500 - 2,500 lbs.	1.500 X 0.095
OVER 2,500 lbs.	1.500 X.120 or 1.750 X 0.095

When alloy steel tubing is used, it must be normalized to relieve stress.

19.3. Window Nets

19.3.1. A window net is required for all sports cars. Sports cars that retain their original OEM (read: glass) driver door window must be completely in the down position. Cars with fixed Lexan door windows are exempt from the mandatory window net requirement.

19.3.2. The window net shall be equipped with a top-mounted quick-release device that, when activated, shall allow the net to fall down.

19.3.3. The window net must be securely mounted to the roll cage and/or main structure of the vehicle, and NOT to the door.

19.3.4. All nets should be in good condition, without frayed edges, cuts or tears, or excessive wear.

19.3.5. Two racing nets, one on each side of the seat, are optional.

19.3.6. Protective nets must meet one of the following standards. Protective nets must have the label indicating the FIA or SFI standard sewed into the webbing.

- SFI 27.1 window nets
- FIA 8863-2013 (can be used with FIA approved 8862 or 8853 seats) racing nets. These nets have specific installation requirements which must be met. See Racing Nets Installation Specification document on FIA.com.

19.3.7. Window net and racing net installation should follow manufacturer instructions.

19.4. Safety Harness

19.4.1. All drivers shall utilize a 5-, 6-, or 7-point restraint harness manufactured to one of the following standards:

- FIA/ISO Standard No. 8853-2016 (see FIA Technical List no.57 – https://www.fia.com/sites/default/files/l57_approved_harnesses_8853-2016_74.pdf)
- SFI Spec. 16.1 (see https://sfifoundation.com/manufacturer-list)
- SFI Spec. 16.5 (see https://sfifoundation.com/manufacturer-list)

Restraint systems meeting SFI standards shall bear a dated SFI spec label. For older labels with the punched manufacturing date, the certification indicated by this label shall expire on Dec 31st of the 2nd year after the date indicated by the label. Starting in 2017 the labels will use a printed expiration date ("Valid Until"); the equipment is not valid after the date printed.

Restraint systems homologated to the FIA 8853-2016 standard will be valid for up to five years after the year stated on the label.

All racing harnesses must have a clearly displayed manufacturers label in addition to its SFI label.

19.4.2. The installation should follow the manufacturers guidelines.
19.4.3. All restraint harness components should be in good condition, without frayed edges, cuts or tears, or excessive wear.
19.4.4. Only separate shoulder straps are permitted. "H"-type configuration is allowed. "Y'-type shoulder straps are not allowed.
19.4.5. FHR specific shoulder straps are permitted, provided the restraint system was homologated with the straps, and only when used in conjunction with an FHR device.

19.5. Decals and Advertising

Event decals must be placed on all cars, following the Event Branding directives.

Advertising and symbols displayed on a car must be in good taste and not interfere with racing numbers or other required markings.

19.6. Racing Numbers

19.6.1. Racing numbers shall be applied only as follows:

- The event will provide the number panel decals and numbers for each car.
- The number panels and numbers must be applied as per the event Style Guide.

19.6.2. Cars not meeting the specifications of this Regulation, in the opinion of the Race Director, during any scheduled track session will be BLACK-FLAGGED and not allowed to re-enter the track until the numbers are in compliance.

19.7. Tire Usage

19.7.1. ***Freedom, Valor, Remembrance, Honor:*** All race tires used in Practice, Qualifying and the Race must have at least 200 tread wear rating.
19.7.2. Tires may be marked or recorded by the Technical Scrutineers.
19.7.3. Modification of any kind to a tire, such as shaving, regroving, or application of chemicals, is prohibited.
19.7.4. ***Sacrifice: Slick race tires may be used for all sessions including the Race***.

19.8. Fuel systems

19.8.1. Sunoco Race Fuels are the official fuel of the Veterans Race of Remembrance.
19.8.2. Fuel samples may be taken by the Technical Inspectors for testing at any time.
19.8.3. Fuel cells or an OEM fuel tank in the originally installed location are permitted.

19.9. Transponders

All cars must be fitted with a MyLaps timing transponder (example shown below) which may be purchased or rented on the Al Kamel web store: https://store.alkamelnorthamerica.com/20-veterans-race-of-remembrance).

All Driver helmets must be fitted with a Driver ID tag (shown below).

These items will be distributed at the event.

	TR2 Transponder	

Any car with a non-functioning transponder will not receive any official times from any other means and may be ordered to stop and repair immediately, at the sole discretion of the Race Director. Timing staff may endeavor to score a car with a failed transponder in-race for position only (no lap times).

19.10. RaceLink GPS/In-Car Flagging Unit

All cars must be fitted with a MyLaps Racelink Club Unit (shown above) which may be rented on the Al Kamel web store. Cable kit must be purchased (also on the Al Kamel web store: https://store.alkamelnorthamerica.com/20-veterans-race-of-remembrance).

Cars with a non-functioning RaceLink may be ordered to stop and repair immediately, at the sole discretion of the Race Director.

19.11. Radio Communication

19.11.1. Team Pit-to-Car Radio

Only the UHF (450-470 MHz) frequency band is permitted for pit to Car radio communication. Competitor radio traffic is limited to a maximum of five (5) watts on handheld radios and a maximum of ten (10) watts ERP on mobile units (base stations) and/or repeaters and must not transmit to Car on one frequency and receive on another at greater than 5Mhz spacing. All Car communication must operate or be rebroadcast in analog mode on 12.5Khz channel spacing. On the transmit and receive of a radio broadcast, the DPL or TPL codes must be the same. Mixing of codes between TX and RX is prohibited. Encrypted or any other radio transmission scheme between Team and Driver not understandable using a standard scanner at any time during any qualifying Session or Race is prohibited.

19.11.2. Team Frequencies

Teams must declare and register their Team-to-Driver radio frequency used in Qualifying and the Race. The USAC / ***VRoR*** designated partner is Racing Radios. Teams must submit frequency registrations directly to ***VRoR*** no later than two (2) weeks prior to their first Race and at each Race if changed. Changes during an Event must be submitted no less than two (2) hours prior to qualifying or Race.

Car-to-car radio transmission or communication between Drivers is prohibited.

19.11.3. VRoR Race Control Frequency

Teams are required to monitor Race Control from Pit Lane before, during, and after sessions.

USAC Channel			Frequency	DPL
Race Control Team Broadcast (Primary)	Simplex	Analog	464.5500	516
Race Control Team Broadcast (Backup)	Simplex	Analog	461.2000	432

19.12. On-board Video & Streaming

Onboard cameras, including streaming, are permitted provided the installation is approved by the Technical Scrutineers. Cars are further permitted to use a video telemetry system such as the GPX system for live video transmission. Only Cars equipped with the GPX system may be featured in the Race Broadcast. Any Car equipped with a video telemetry system must disclose the relevant link to ***VRoR*** for all Qualifying Sessions and Races.

Additional cameras may be installed only with the approval of ***VRoR*** and must be installed in a manner to satisfy the Model Specific Technical Regulations.

19.13. Fire suppression

A fire extinguisher or extinguishing system must be carried on all vehicles, the minimum rating being 1.5 kg or 3.3 lbs.

Fire bottles must be currently certified and have a pressure gauge.

19.13.1. Extinguisher Systems

An onboard system should meet either SFI 17.1 or 17.2 or FIA Technical Lists No.16, No.52, or No.97.

It should be operable by the driver while normally seated either by contact or mechanically assisted or electrically assisted triggering system; such electrical activation must be via a system independent of the vehicle electrical system, such as a self-contained 9V battery.

19.13.2. Hand-held extinguisher

Extinguishers should be retained in positive quick-release brackets, secured to the vehicle by a minimum of two 6mm bolts.

Hand-held extinguishers must be dry chemical or AFFF (aqueous film forming foam).

An extinguisher need not be able to be removed by the driver while competing but must be able to be removed with a minimum of effort and without the use of tools.

Extinguishers must have a pressure gauge. The needle must be clearly in the green zone of the gauge. Hand operated extinguishers must not be carried loose.

19.14. Ballast

19.14.1. Ballast may be used. It shall have no other purpose than to increase the weight of the vehicle to meet the class power to weight.

19.14.2. Ballast must be composed of lead or cast iron / steel. All ballast shall be located in the front passenger footwell/seating area, aft of the firewall and any footwell angle, and forward of the aft-edge of the forward-most passenger door opening, unless otherwise approved by the Technical Inspectors.

19.14.3. Ballast shall be in segments no heavier than fifty (50) pounds and shall be capable of being removed to be weighed apart from the car.

19.14.4. Each segment shall be fastened with a minimum of two (2) one-half (1/2) inch bolts and positive lock nuts of SAE Grade 5/Metric 8.8 or better, and shall utilize large-diameter, load distributing washers.

19.14.5. The mounting equipment must be sized appropriately for the safe containment of the total mass of ballast during an accident. The Technical Inspectors have the final approval of any ballast mounting.

19.14.6. Holes may be drilled in the front passenger footwell/seating area floor pan for purposes of mounting the ballast (only). It is recommended that the floor pan be reinforced as required, such as with the use of backing plates.

19.14.7. The Technical Inspectors have the final approval of any ballast installation.

19.14.8. Ballast must not be added or removed during qualifying or the race, subject to penalties.

20. Driver Safety Gear

Drivers must wear the following equipment during all on-track sessions.

20.1.1. A safety helmet which meets one of the following FIA-approved standards:

- Snell Foundation SA2015
- Snell Foundation SA2020
- Snell Foundation SA2025
- SFI Foundation Inc., 31.1 2015
- SFI Foundation Inc., 31.1 2020
- FIA 8859-2015
- FIA 8859-2024
- FIA 8860-2010
- FIA 8860-2018

No helmet may be modified from its specification as manufactured, except in compliance with instructions approved by the manufacturer and the standards organization which certified the model concerned. Any other modification will render the helmet unacceptable.

20.1.2. Drivers must use a Frontal Head Restraint device. The following specifications are accepted:

- FIA 8858-2002, 8858-2010
- SFI Foundation Inc., 38.1

20.1.3. Drivers must wear fire-resistant balaclavas. Fire- resistant helmet skirts are recommended. The following specifications are accepted:

- FIA 8856-2000, 8856-2018
- SFI Foundation Inc., 3.3

20.1.4. Single-layer suits are prohibited. Only multi-layer, one piece driving suits are permitted. The following specifications are accepted:

- FIA 8856-2000, 8856-2018
- SFI Foundation Inc., 3.2A/5, 3.4/5

20.1.5. Fire-resistant underwear is required with double layer suits but not required with three or more-layer suits unless the manufacturer of the suit so specifies. The following specifications are accepted:

- FIA 8856-2000, 8856-2018
- SFI Foundation Inc., 3.3

20.1.6. Socks made of fire-resistant material are mandatory. The following specifications are accepted:

- FIA 8856-2000, 8856-2018
- SFI Foundation Inc., 3.3

20.1.7. Shoes or gloves made of leather or any approved fire-resistant material containing no holes are mandatory. Gloves must have a layer of fire- resistant material next to the skin. The following specifications are accepted:

- FIA 8856-2000, 8856-2018
- SFI Foundation Inc., 3.3